Reliable sealing - Compact structure - Simple operation

Counterbalance Valve
Selection Guide

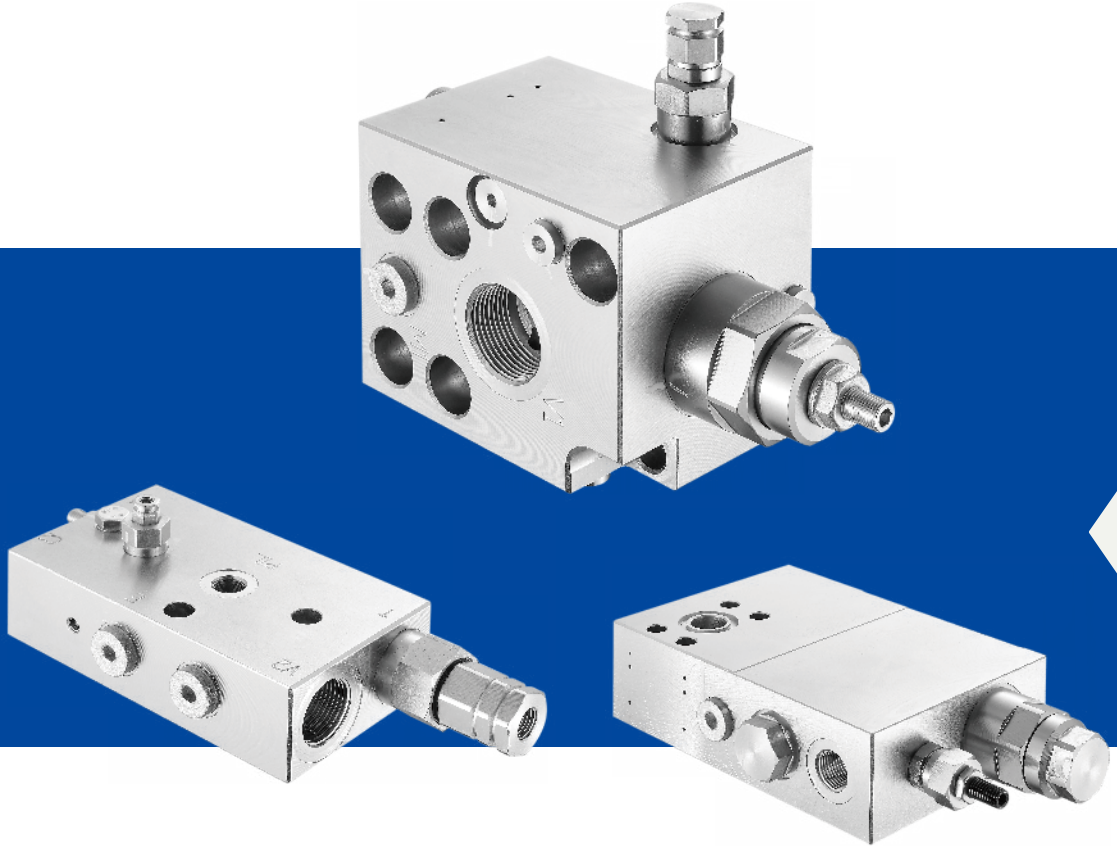

www.henglihydraulics.com

FBRC08D

Counterbalance Valve for Boom

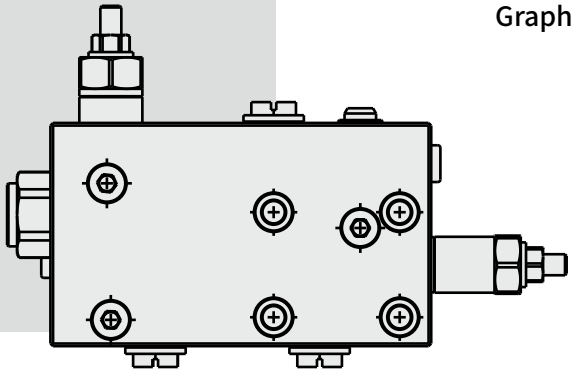

Drift Diameter	Flow	Pressure	Crack Pressure		Material
			Valve 1	Valve 2	
08	⩽ 60 L/min	⩽ 250 bar	43 bar	50 bar	Aluminium

Graphic symbol

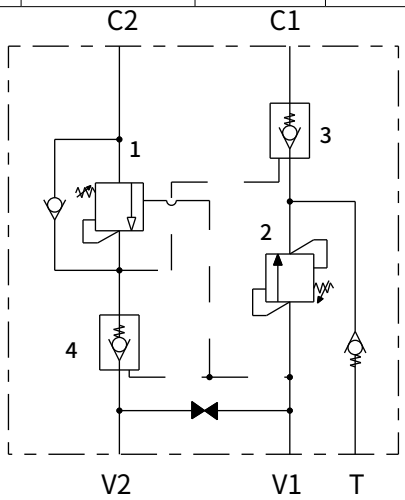

Outline Dimension

(Dimensions in mm)

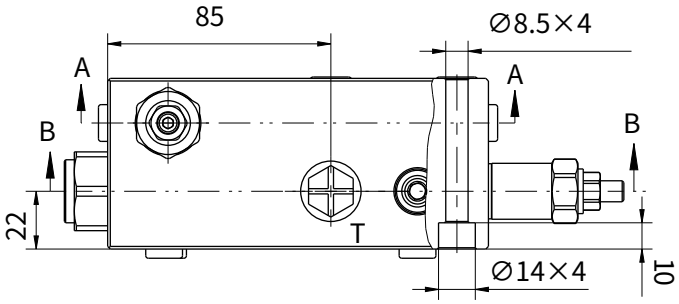

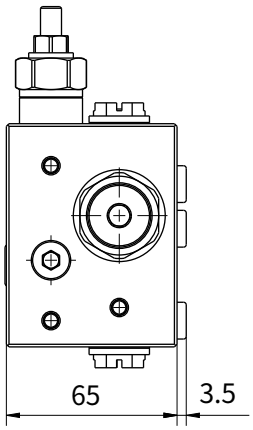

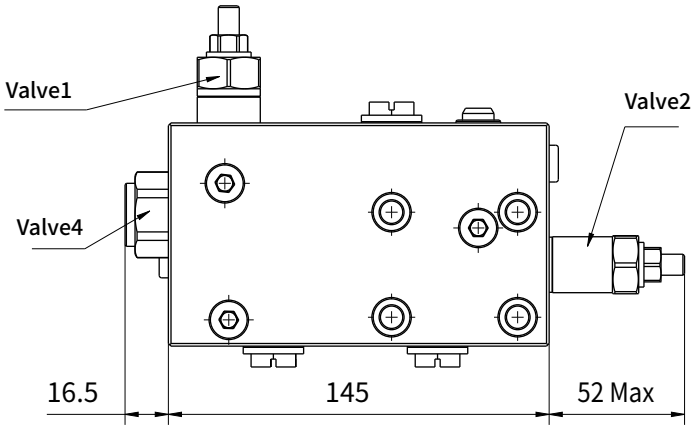

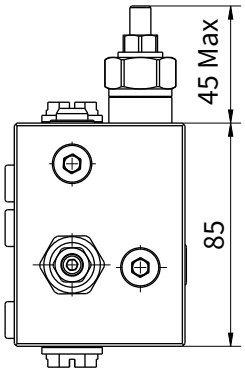

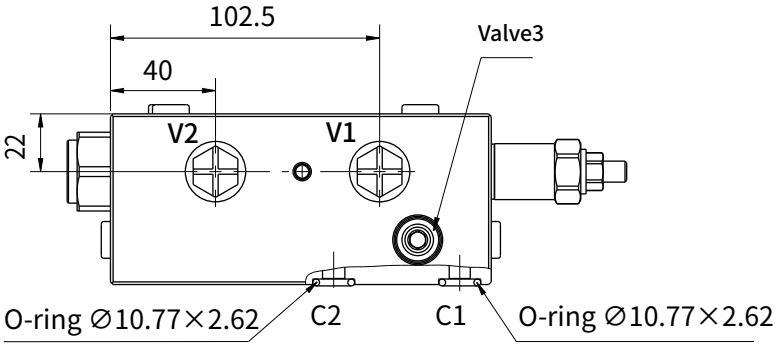

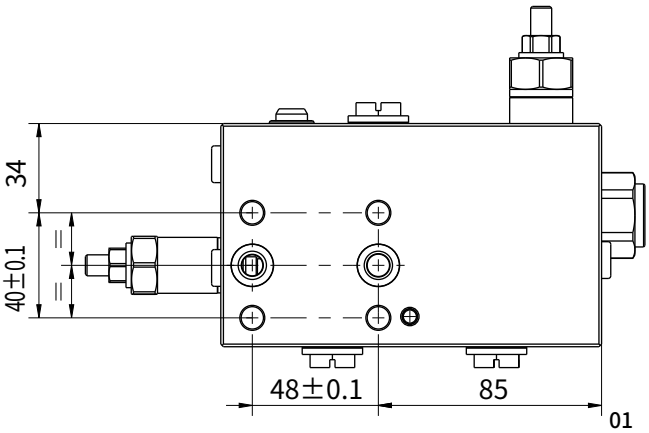

FBRC08D

Counterbalance Valve
for Crank/Leveling

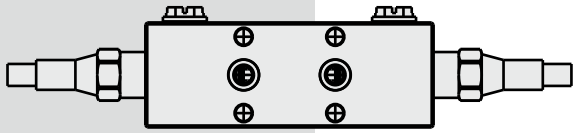

Drift Diameter	Flow	Pressure	Pilot Ratio	Material
08	60 L/min	280 bar	4.2:1	Aluminium

Graphic symbol

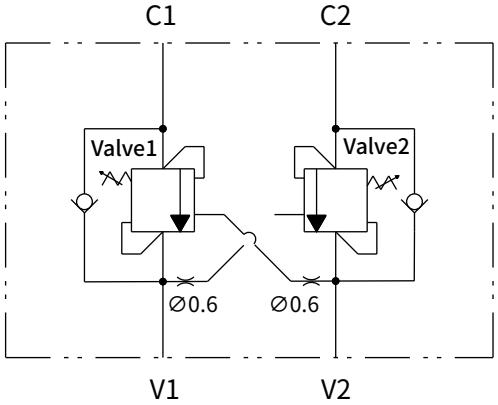

Outline Dimension

(Dimensions in mm)

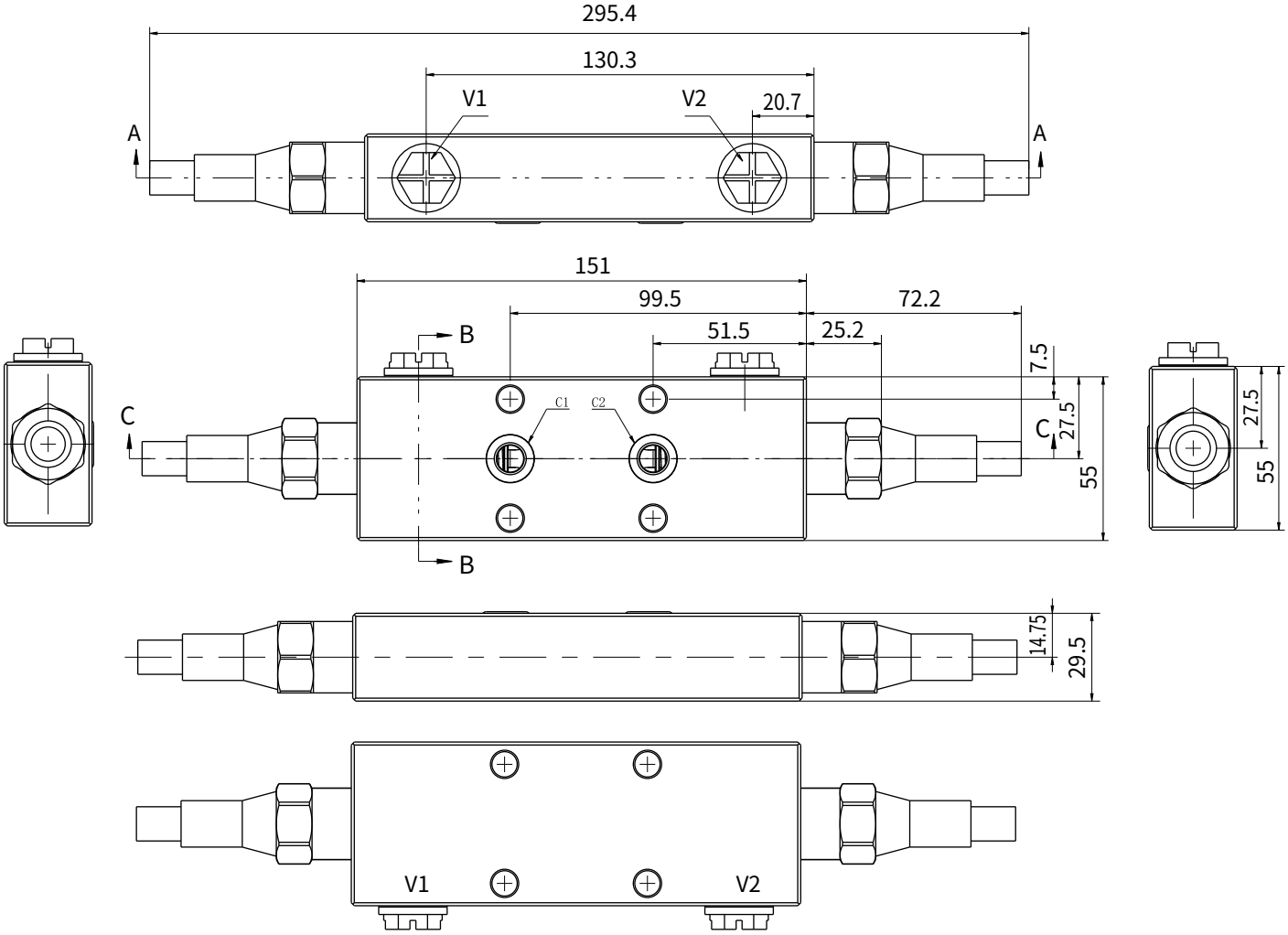

FBRC08D

Counterbalance Valve for Axle

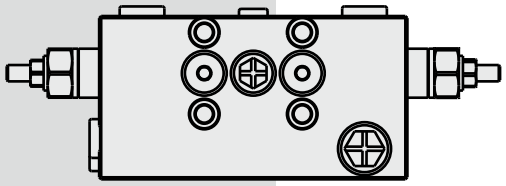

Drift Diameter	Flow	Pressure	Pilot Ratio	Material
08	60 L/min	350 bar	11:1	Steel

Graphic symbol

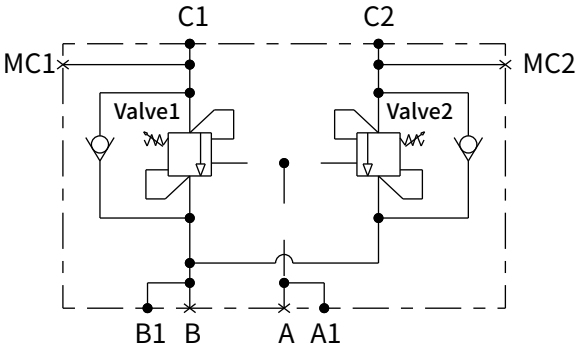

Outline Dimension

(Dimensions in mm)

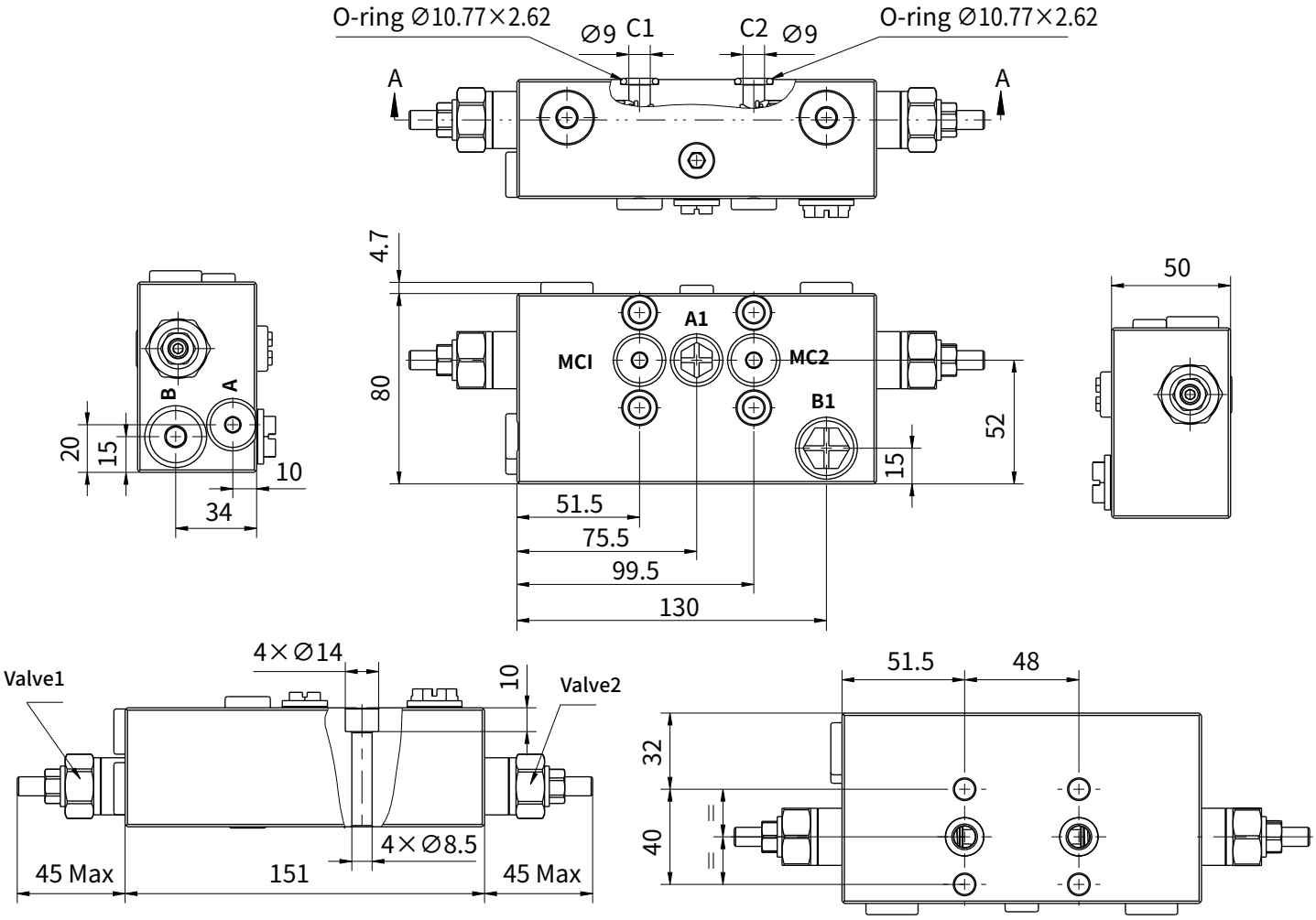

FBRC08D

Counterbalance Valve for Telescopes

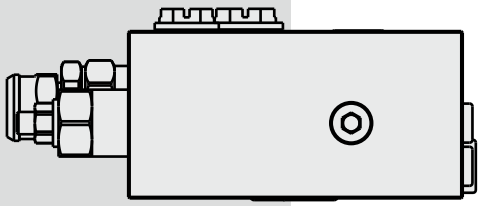

Drift Diameter	Flow		Pressure	Pilot Ratio		Material
	Valve 1	Valve 2		Valve 1	Valve 2	
08	⩽ 60 L/min	⩽ 150 L/min	⩽ 350 bar	4.2:1	4.1:1	Aluminium

Graphic symbol

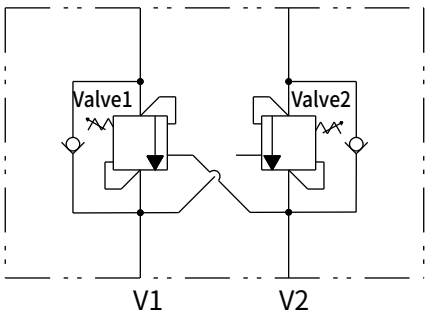

Outline Dimension

(Dimensions in mm)

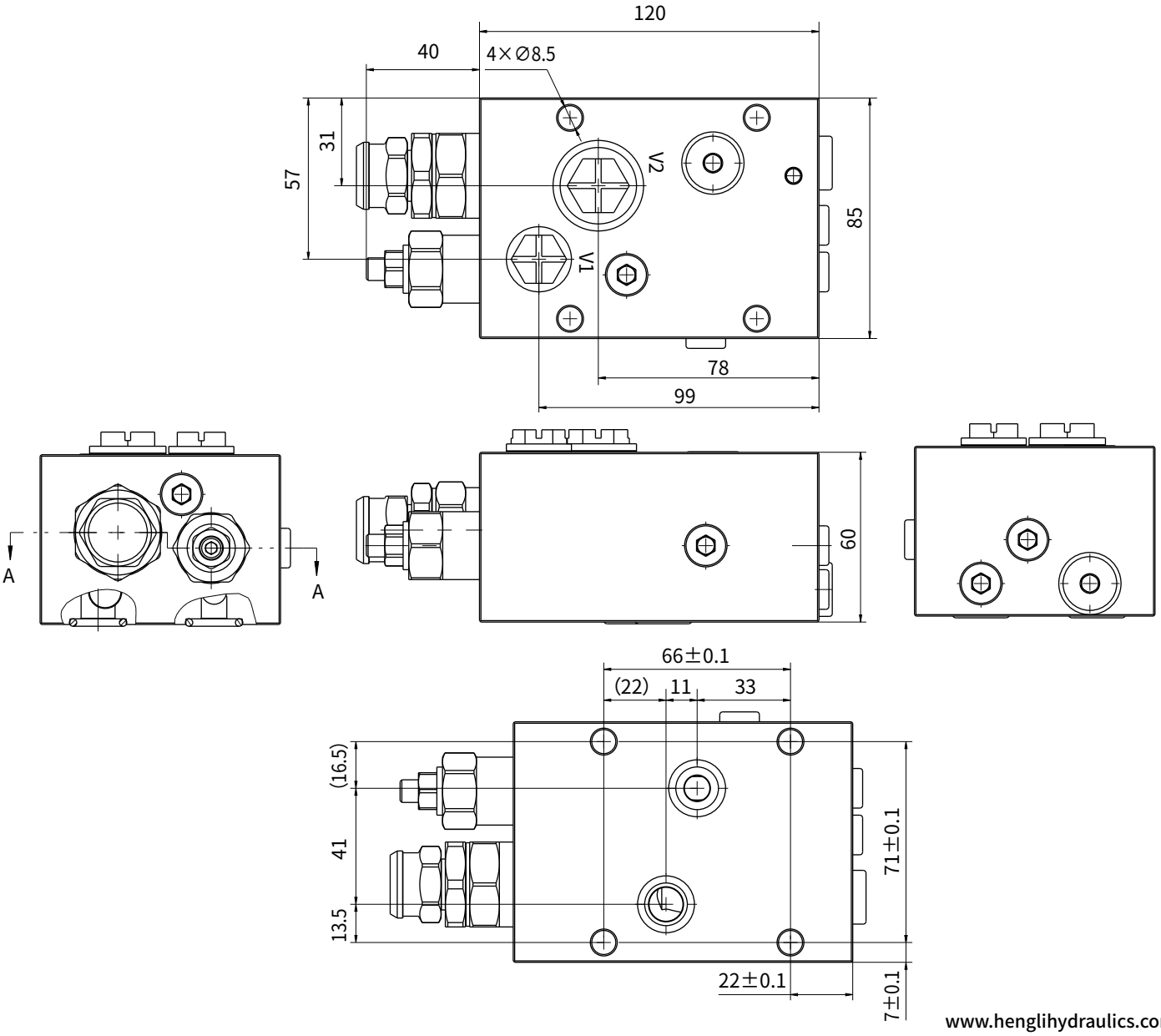

FBRC08D

Counterbalance Valve
for Axle Extension

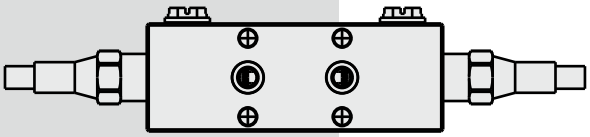

Drift Diameter	Flow	Pressure	Pilot Ratio	Material
08	60 L/min	350 bar	4.2:1	Steel

Graphic symbol

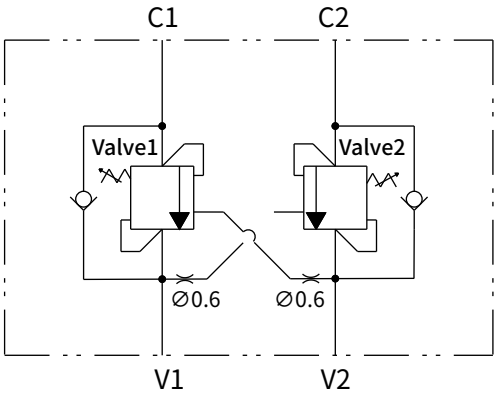

Outline Dimension

(Dimensions in mm)

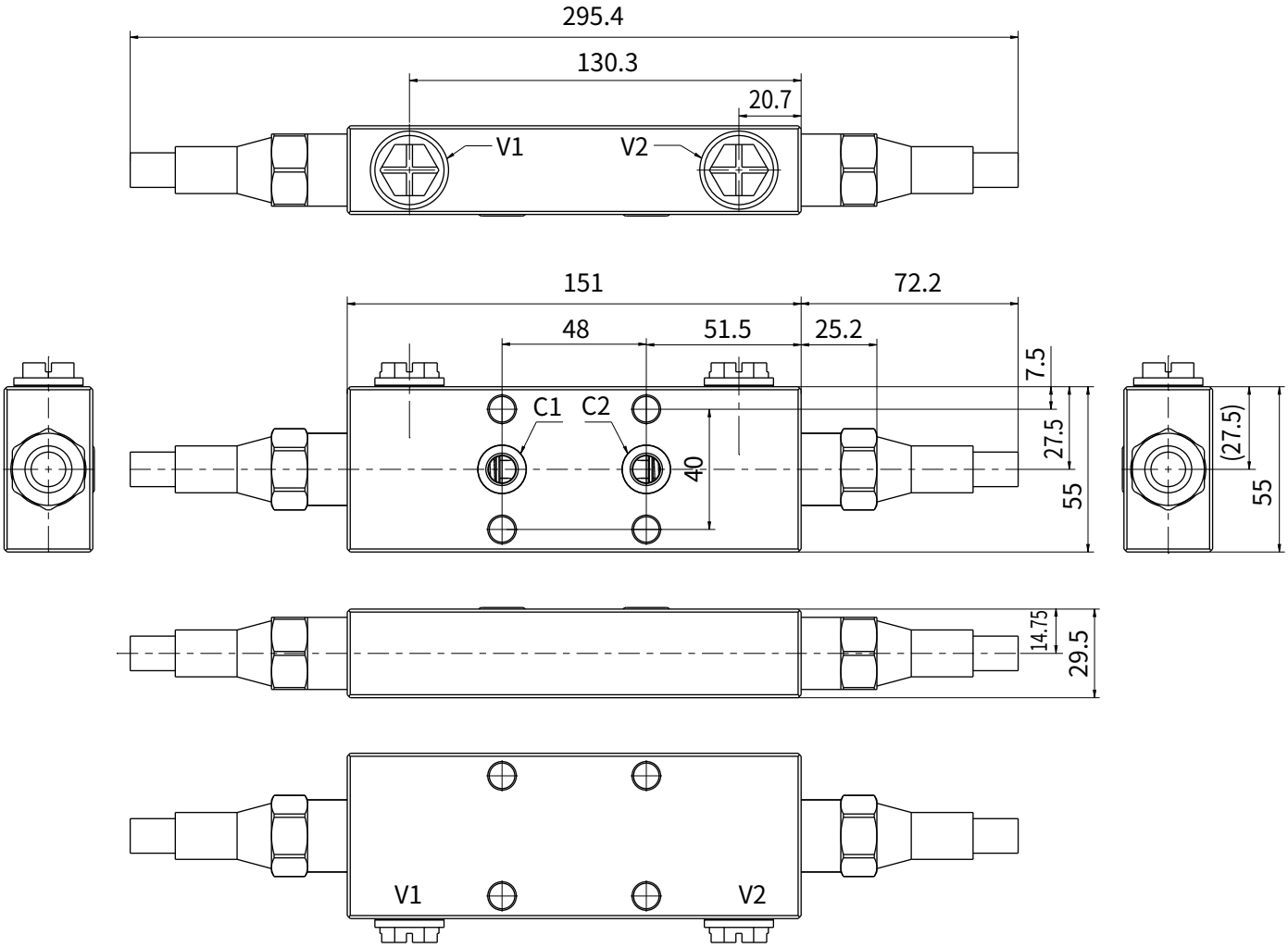

FBRC08D

Counterbalance Valve for Crank

Drift Diameter	Flow	Pressure	Pilot Ratio		Material
			Valve 1	Valve 2	
08	60 L/min	350 bar	4.2:1	2.1:1	Steel

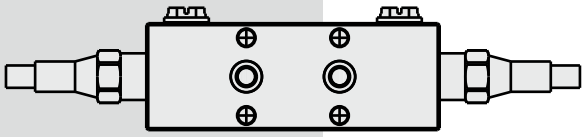

Graphic symbol

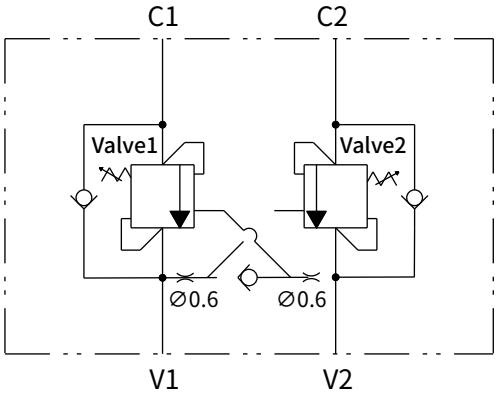

Outline Dimension

(Dimensions in mm)

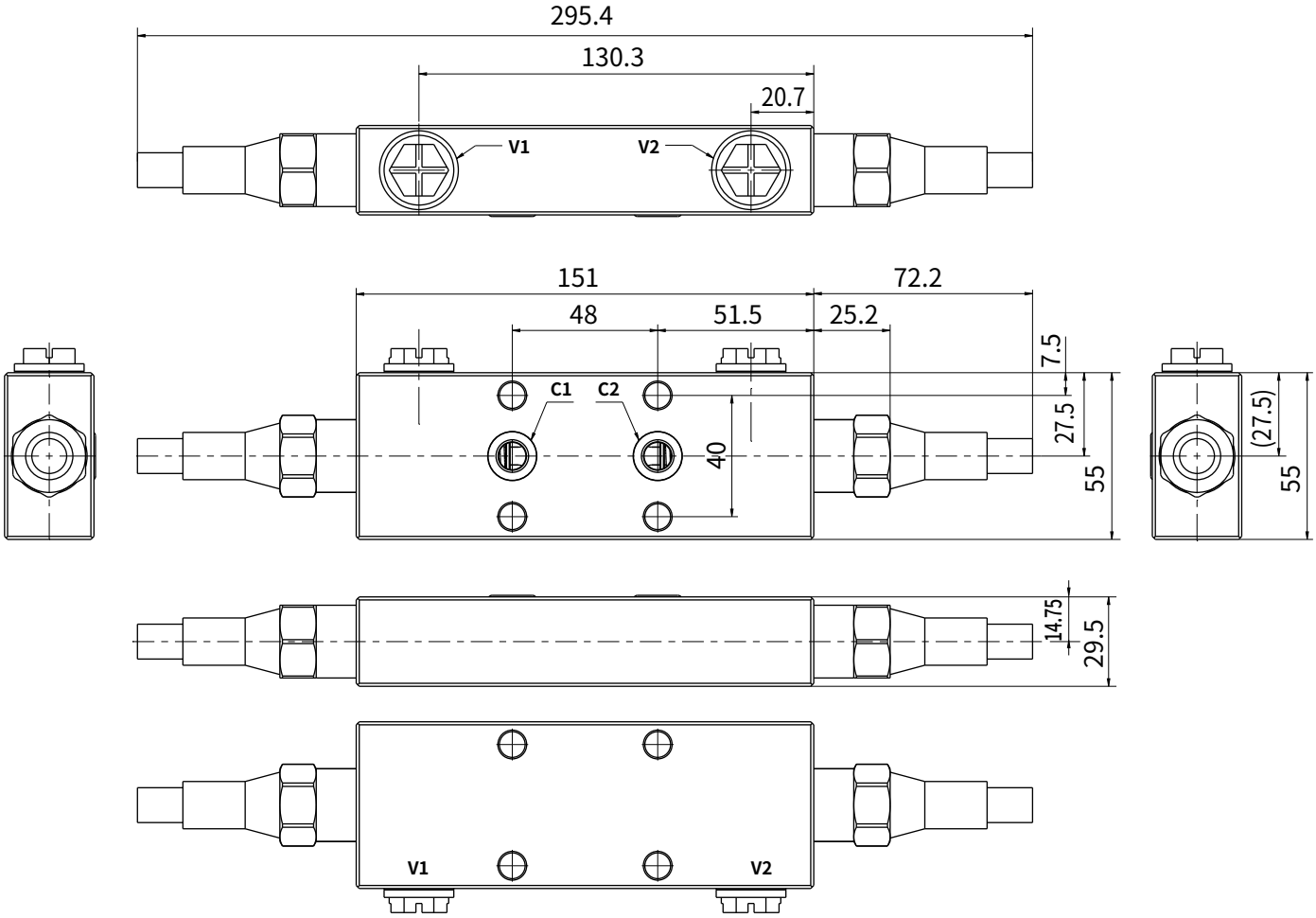

FBRC08D

Counterbalance Valve for Axle

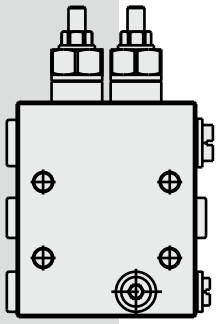

Drift Diameter	Flow	Pressure	Pilot Ratio	Material
08	60 L/min	350 bar	11:1	Steel

Graphic symbol

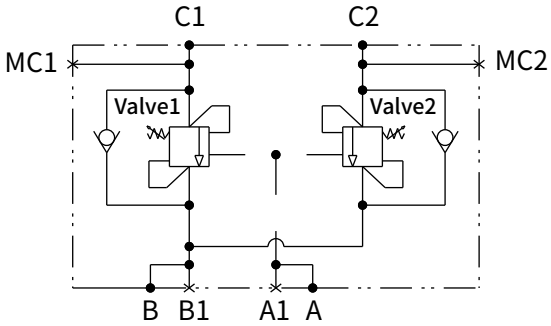

Outline Dimension

(Dimensions in mm)

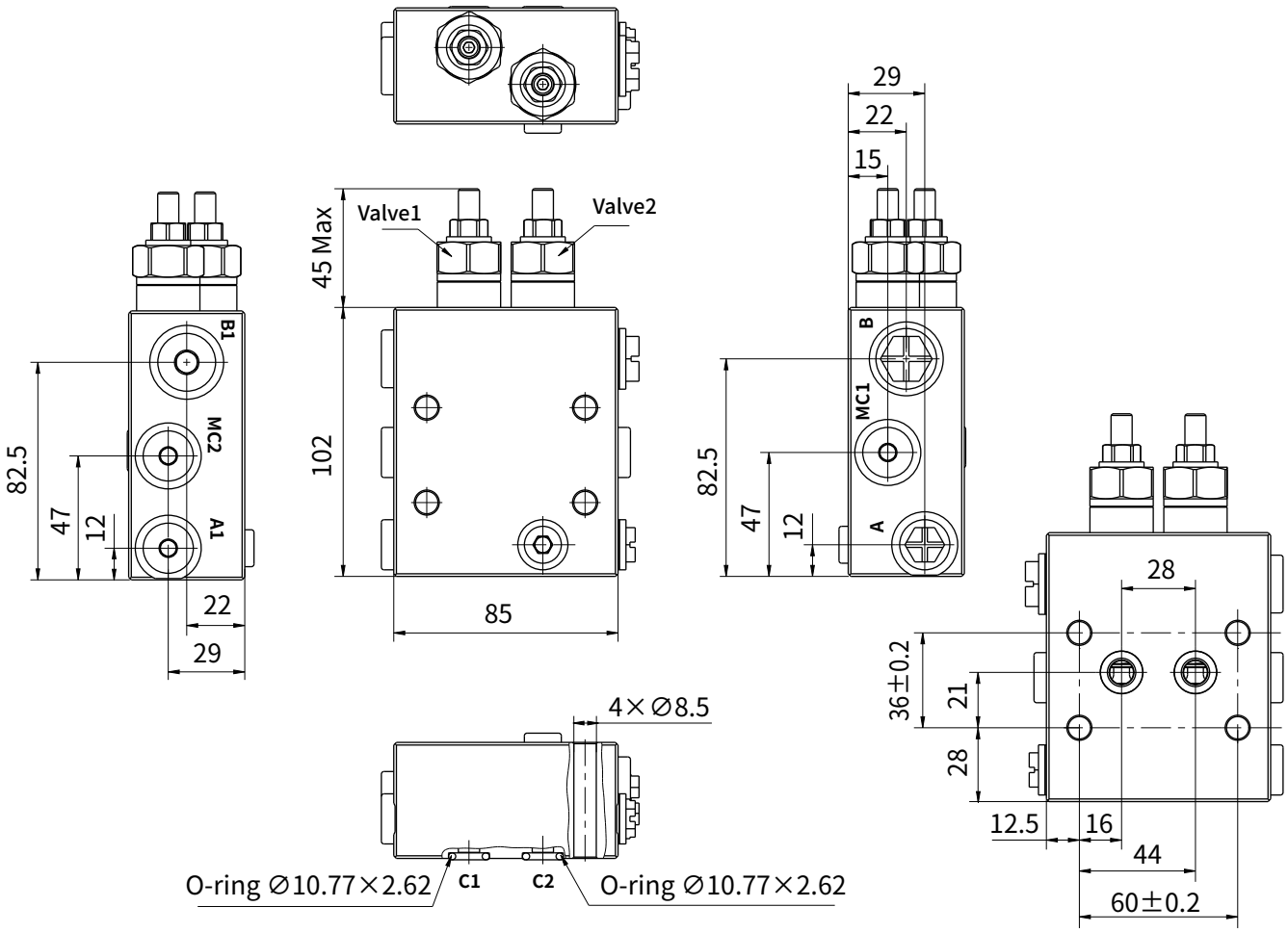

FBRC08D

Counterbalance Valve
for Slewing Buffering

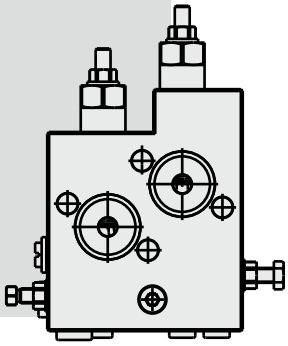

Drift Diameter	Flow	Pressure	Pilot Ratio	Material
08	⩽ 60 L/min	⩽ 210 bar	4.2:1	Aluminium

Graphic symbol

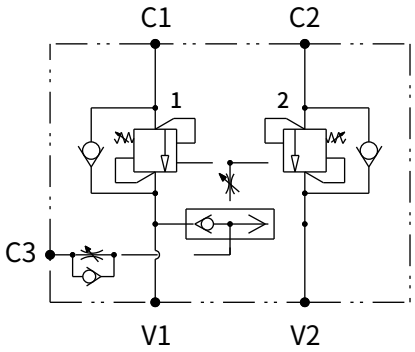

Outline Dimension

(Dimensions in mm)

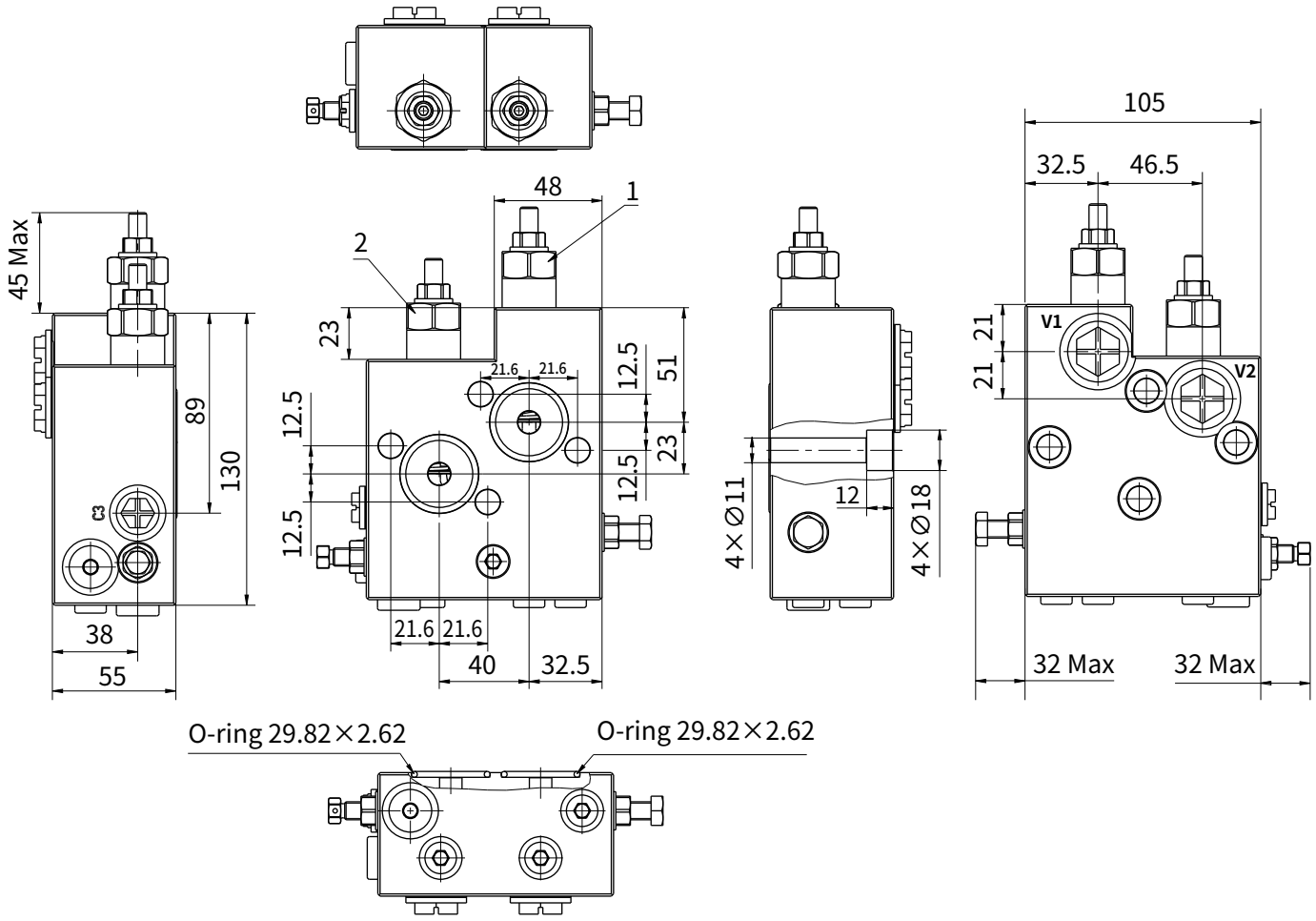

FBRC08D

Counterbalance Valve for Telescopes

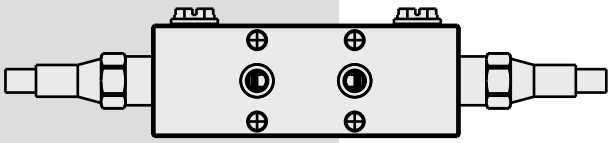

Drift Diameter	Flow	Pressure	Pilot Ratio	Material
08	60 L/min	350 bar	4.2:1	Steel

Graphic symbol

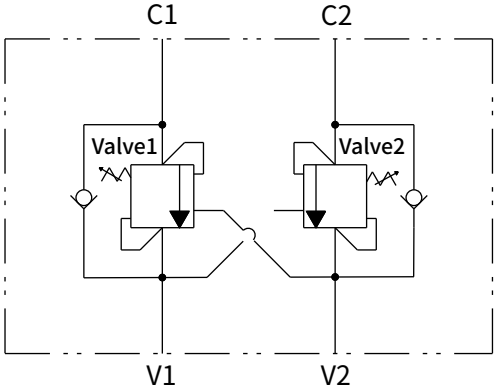

Outline Dimension

(Dimensions in mm)

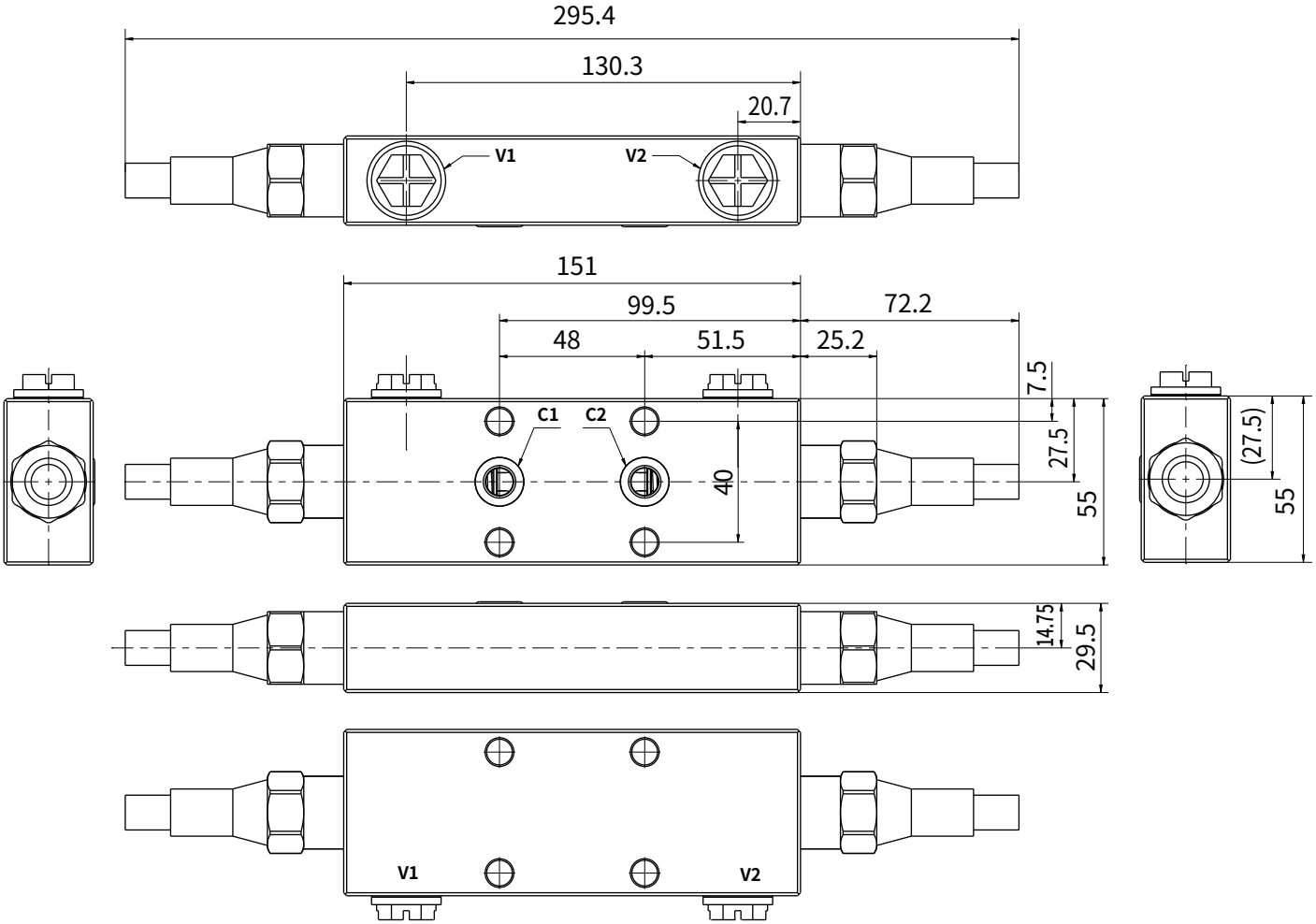

FBRC08D

Counterbalance Valve
for Telescopes

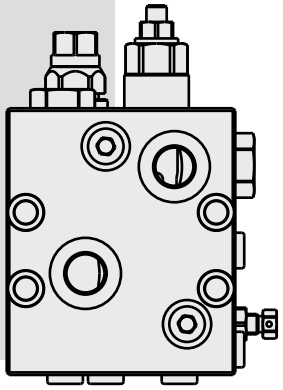

Drift Diameter	Flow	Pressure	Pilot Ratio	Material
08	100 L/min	350 bar	4:1	Aluminium

Graphic symbol

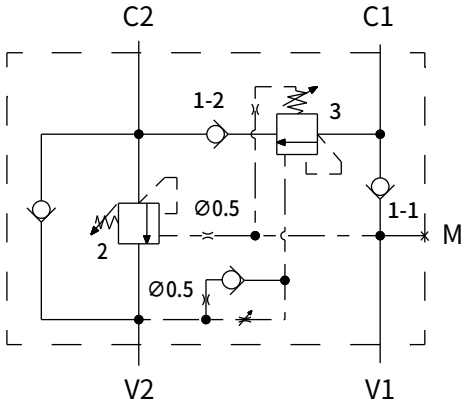

Outline Dimension

(Dimensions in mm)

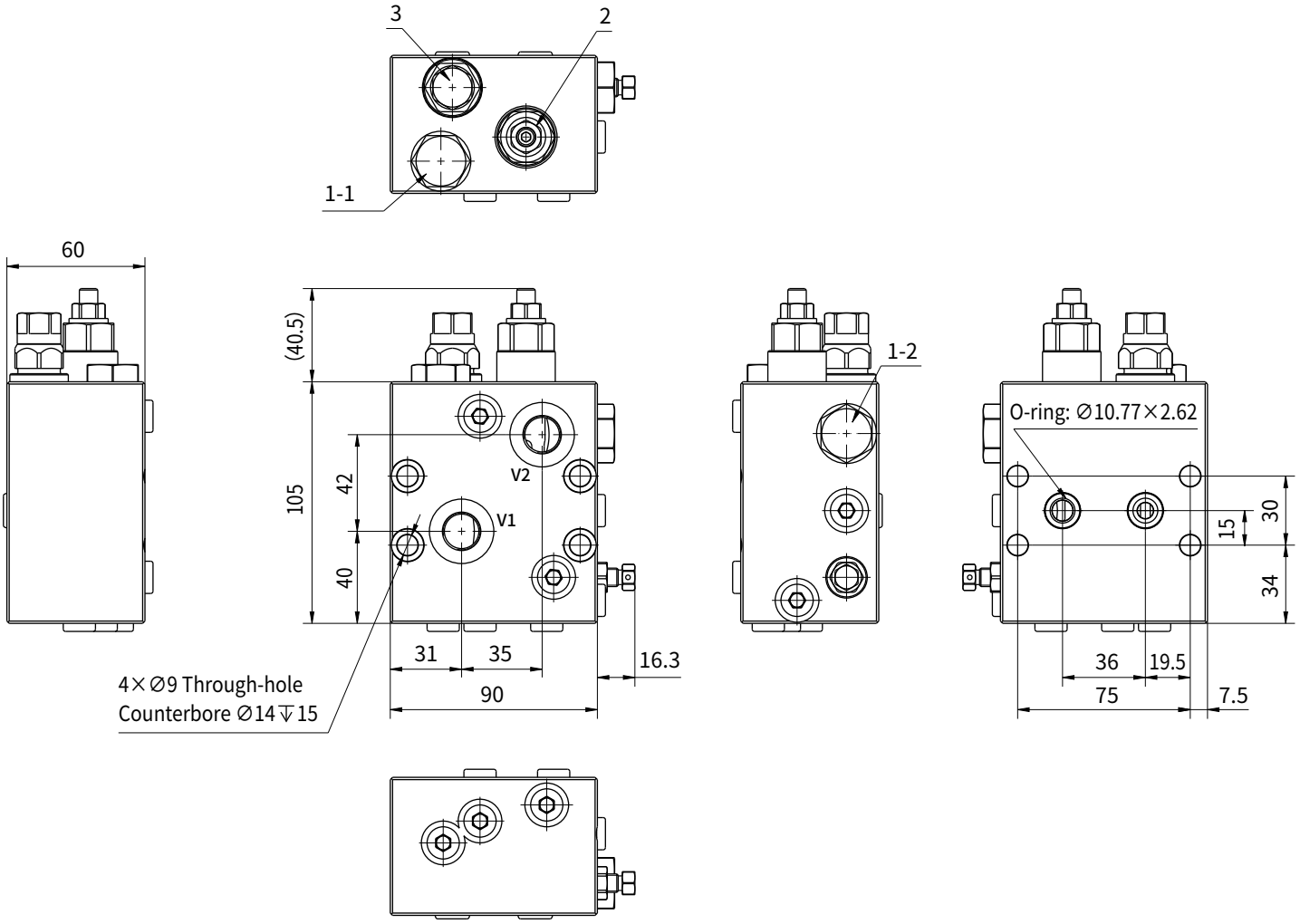

FBRC08E

Counterbalance Valve for Axle Floating

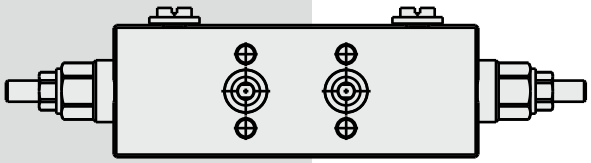

Drift Diameter	Flow	Pressure	Pilot Ratio	Material
08	⩽ 30 L/min	⩽ 350 bar	4:1	Aluminium

Graphic symbol

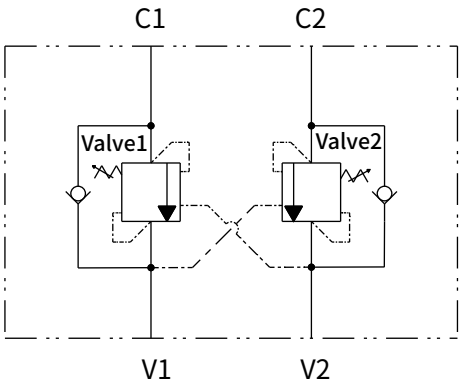

Outline Dimension

(Dimensions in mm)

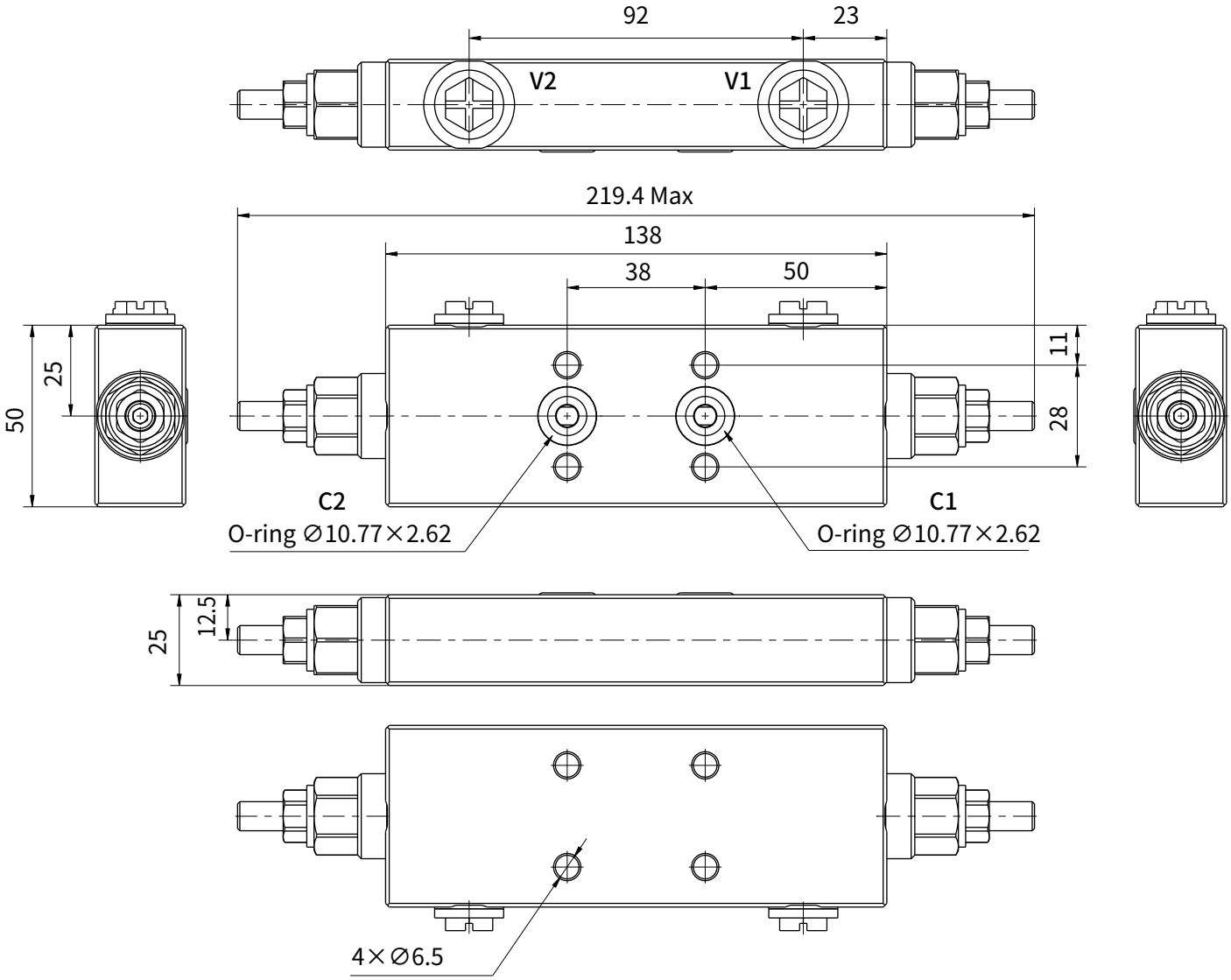

FBRC08E

Counterbalance Valve for Leveling

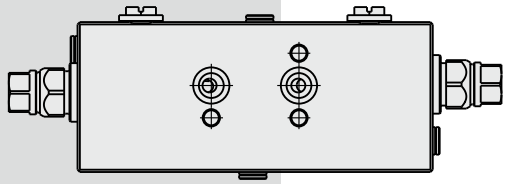

Drift Diameter	Flow	Pressure	Pilot Ratio	Material
08	40 L/min	350 bar	4:1	Aluminium

Graphic symbol

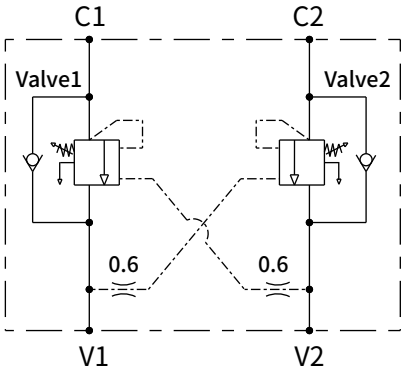

Outline Dimension

(Dimensions in mm)

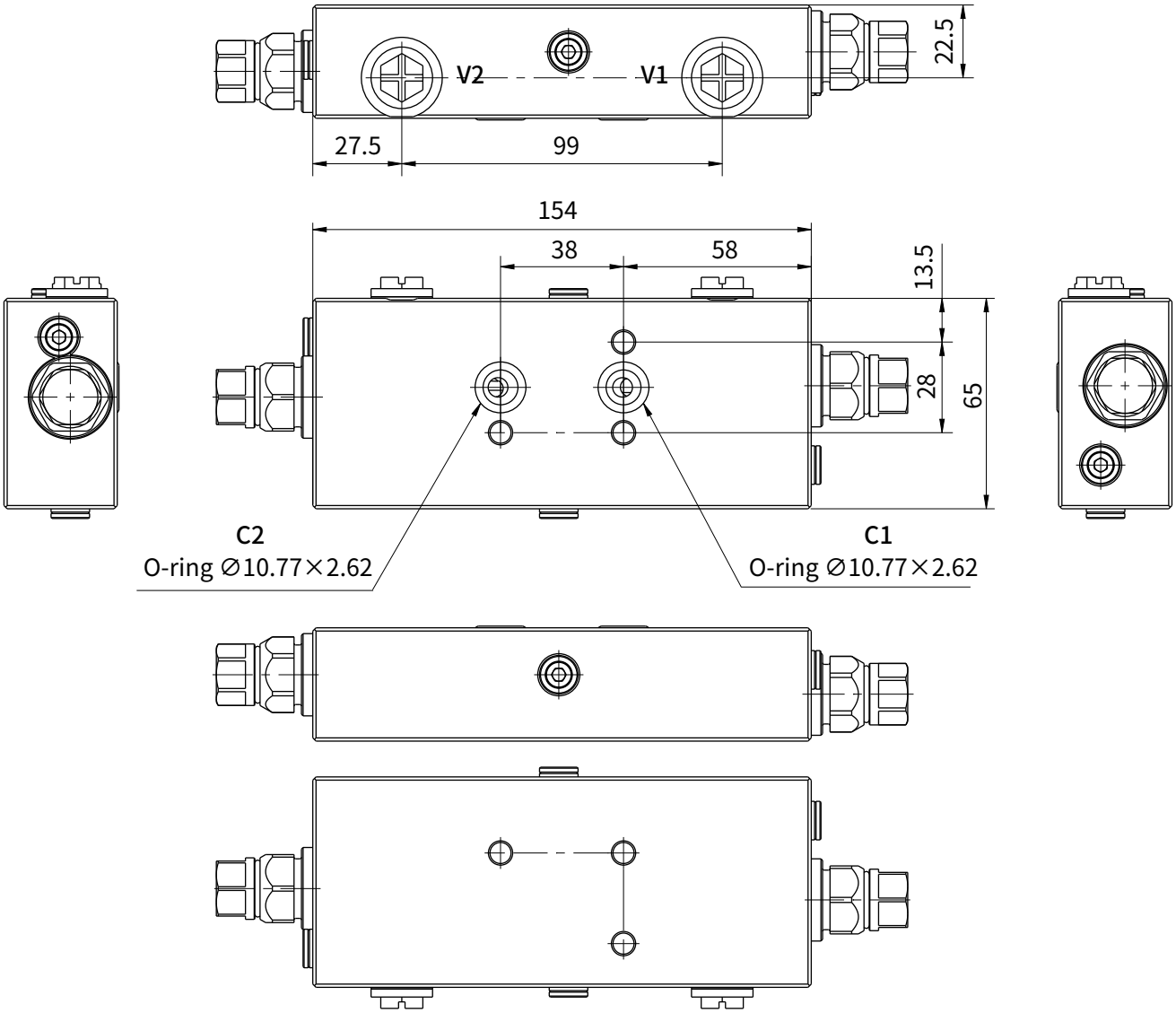

FBRC08E

Counterbalance Valve for Telescopes

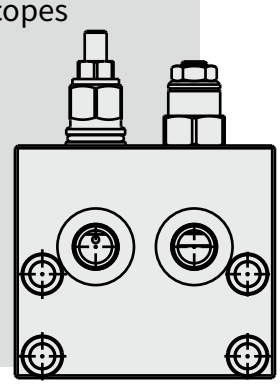

Drift Diameter	Flow	Pressure	Pilot Ratio	Material
08	60 L/min	350 bar	3:1	Aluminium

Graphic symbol

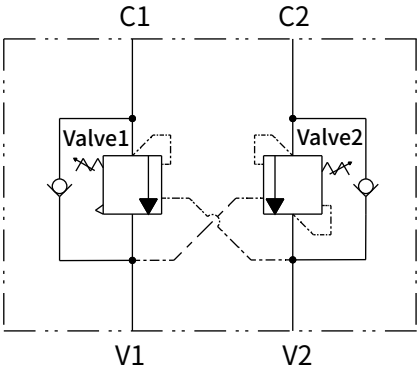

Outline Dimension

(Dimensions in mm)

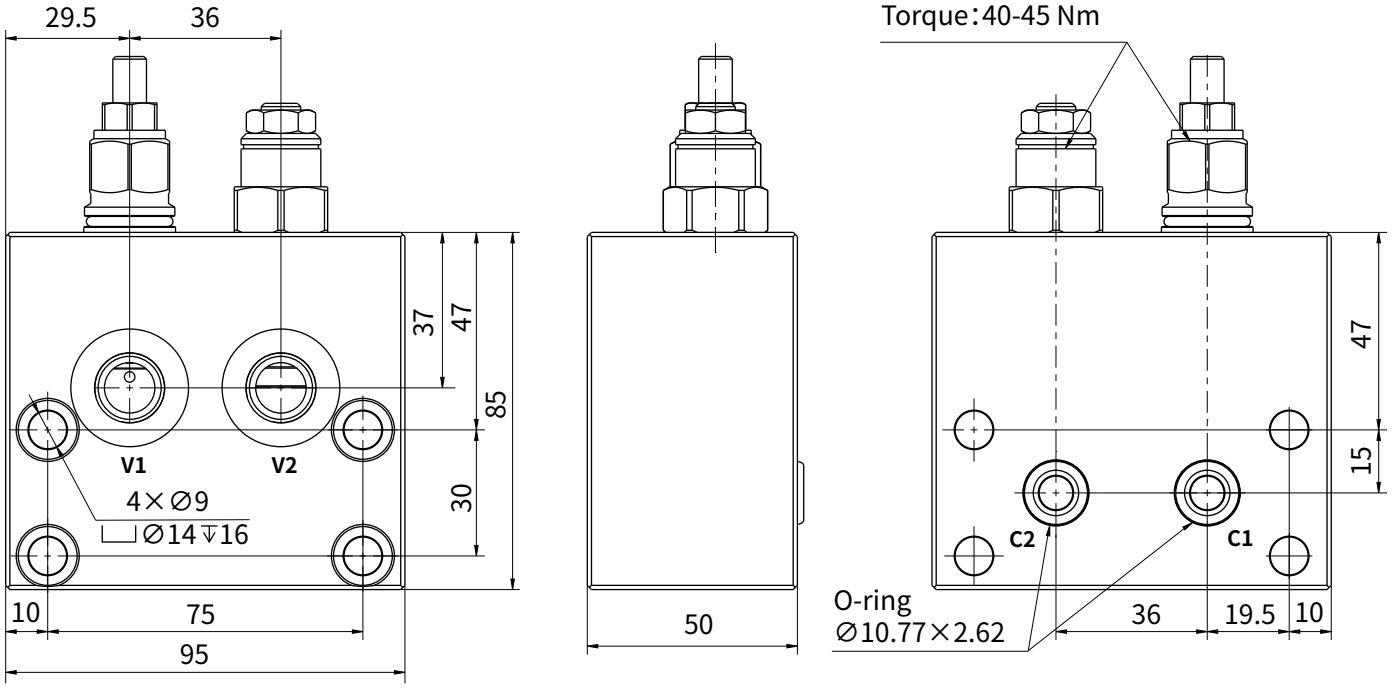

FBRC08E

Counterbalance Valve for Telescopes

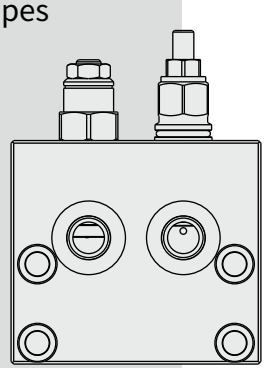

Drift Diameter	Flow	Pressure	Pilot Ratio	Material
08	60 L/min	350 bar	3:1	Aluminium

Graphic symbol

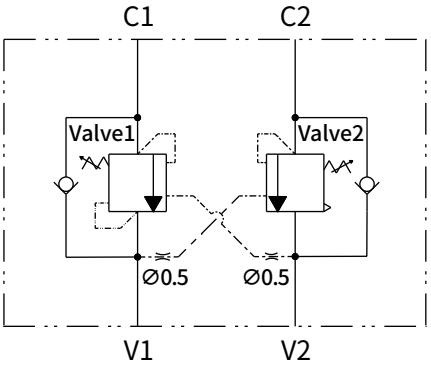

Outline Dimension

(Dimensions in mm)

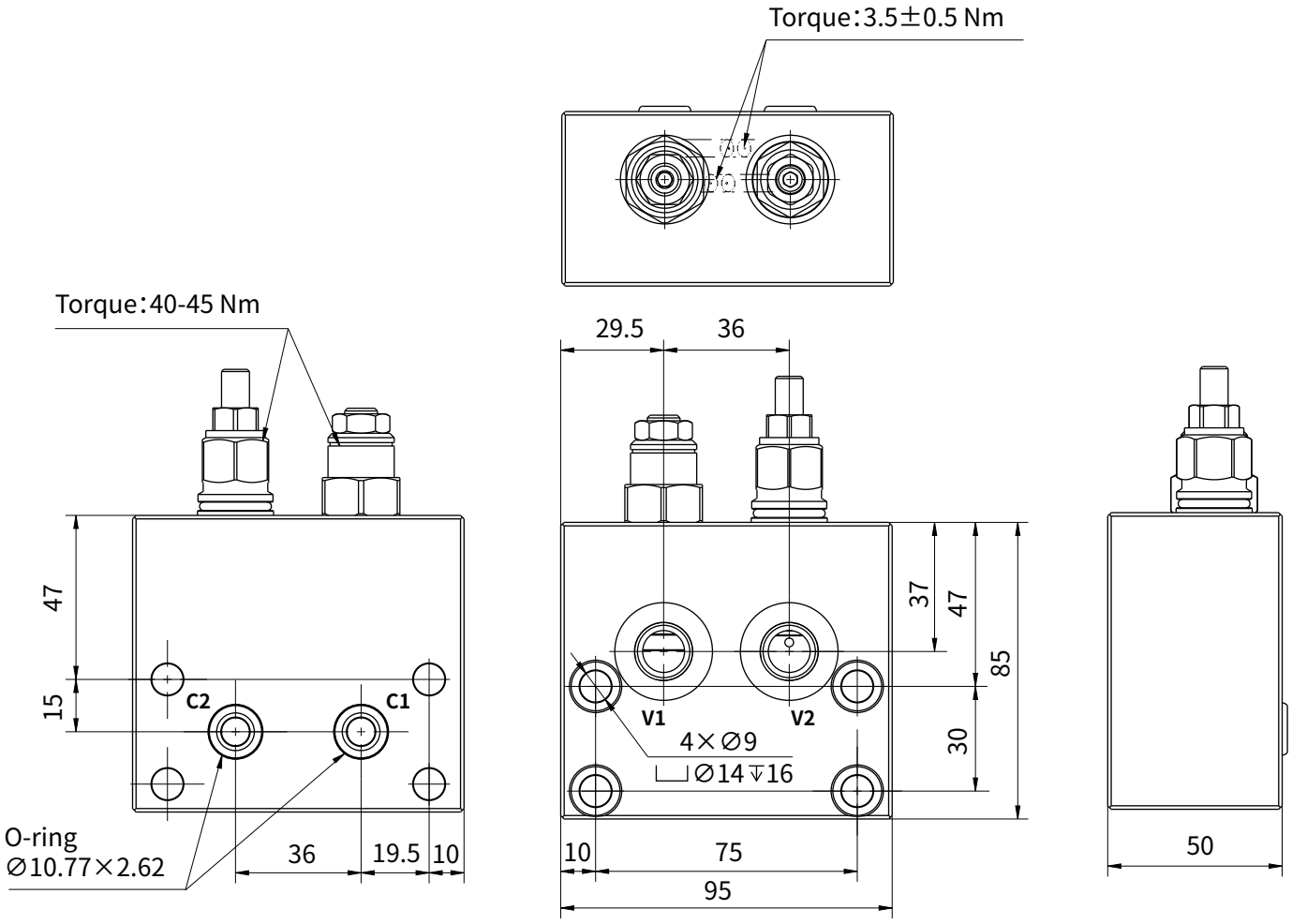

FBRC08E

Counterbalance Valve
for Flying Boom

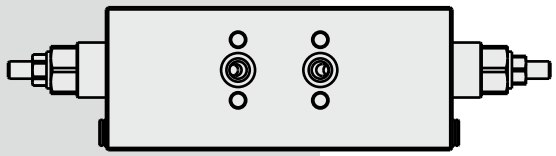

Drift Diameter	Flow	Pressure	Pilot Ratio	Material
08	8 L/min	350 bar	4:1	Aluminium

Graphic symbol

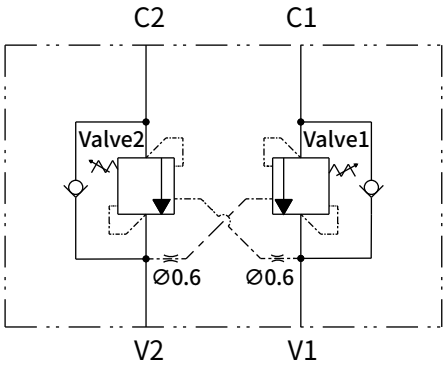

Outline Dimension

(Dimensions in mm)

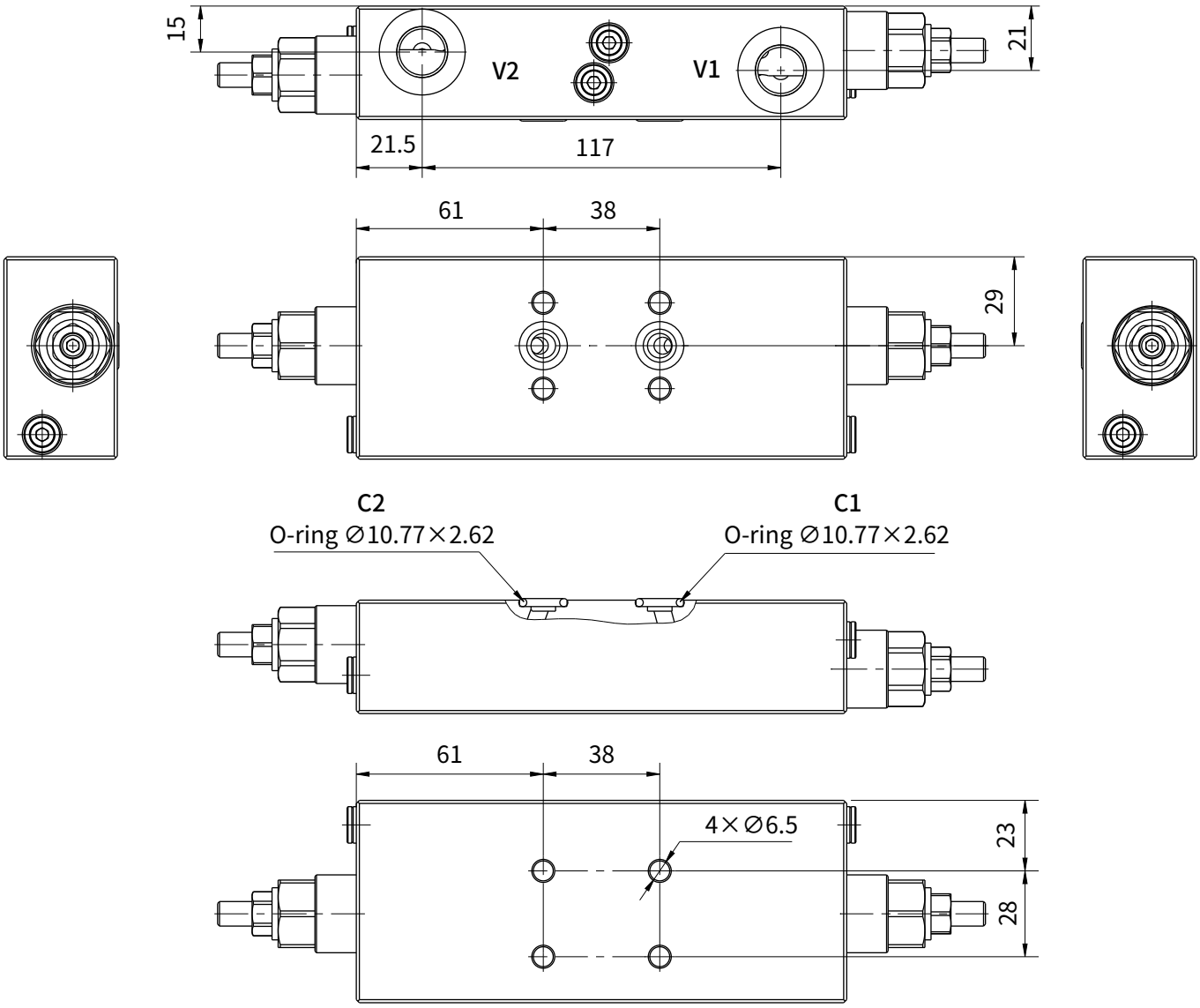

FBRC08E

Counterbalance Valve for Floating

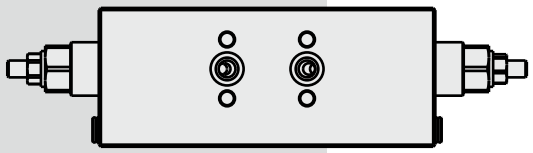

Drift Diameter	Flow	Pressure	Pilot Ratio	Material
08	60 L/min	350 bar	8:1	Aluminium

Graphic symbol

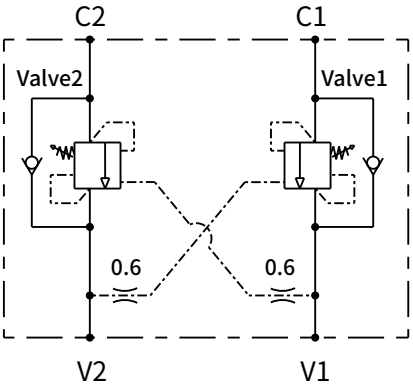

Outline Dimension

(Dimensions in mm)

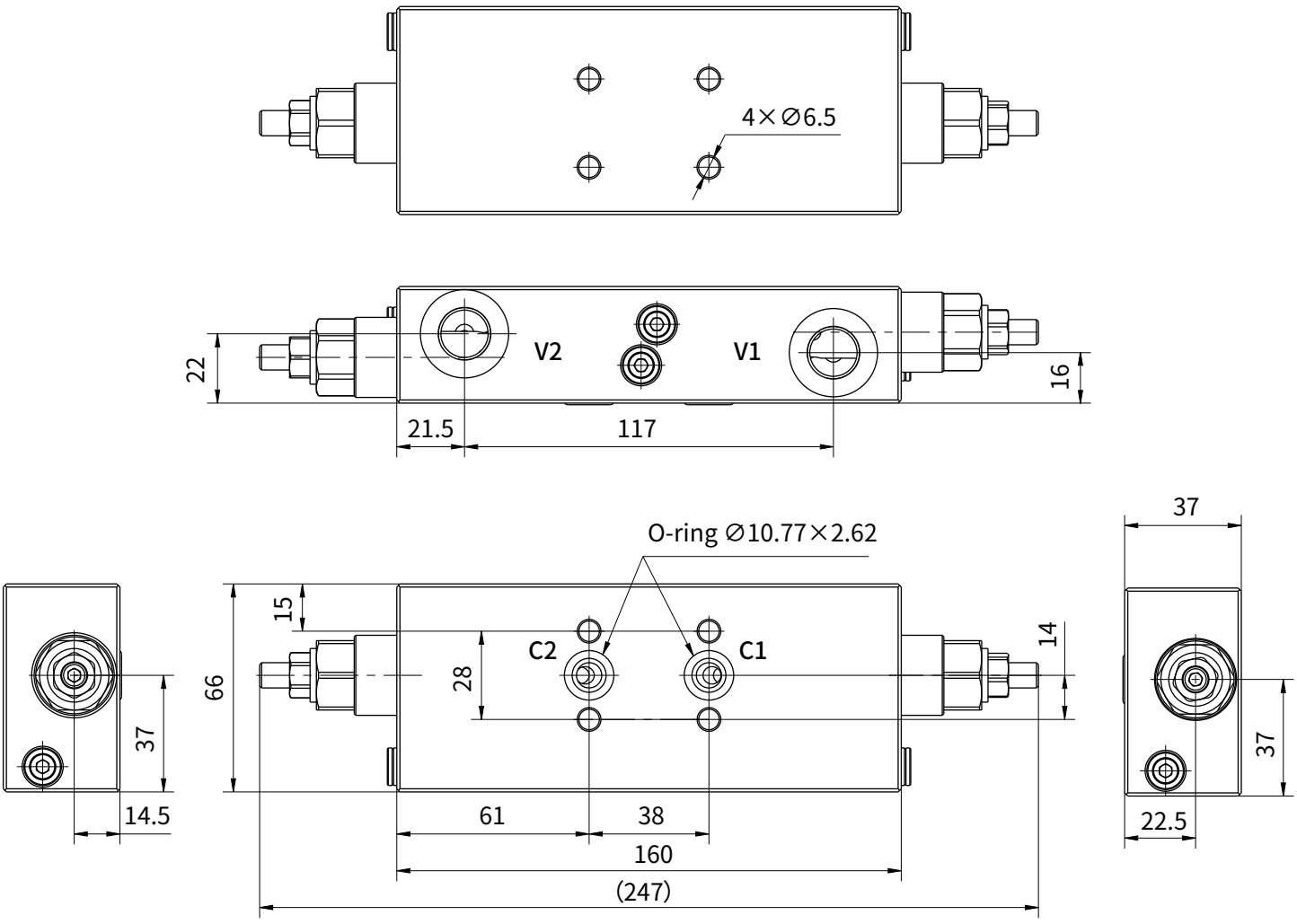

FBRC08E

Counterbalance Valve for Floating

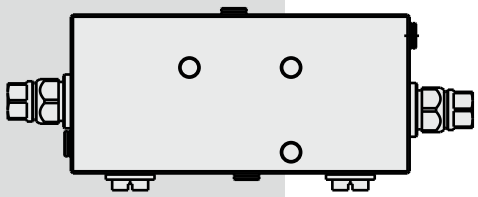

Drift Diameter	Flow	Pressure	Pilot Ratio	Material
08	⩽ 40 L/min	⩽ 350 bar	4:1	Aluminium

Graphic symbol

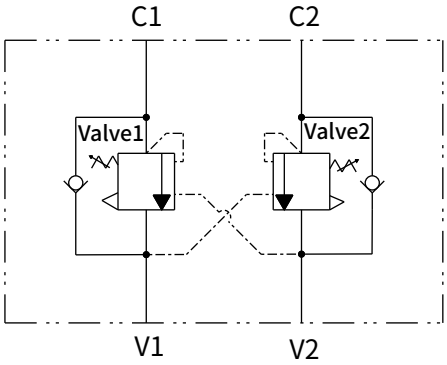

Outline Dimension

(Dimensions in mm)

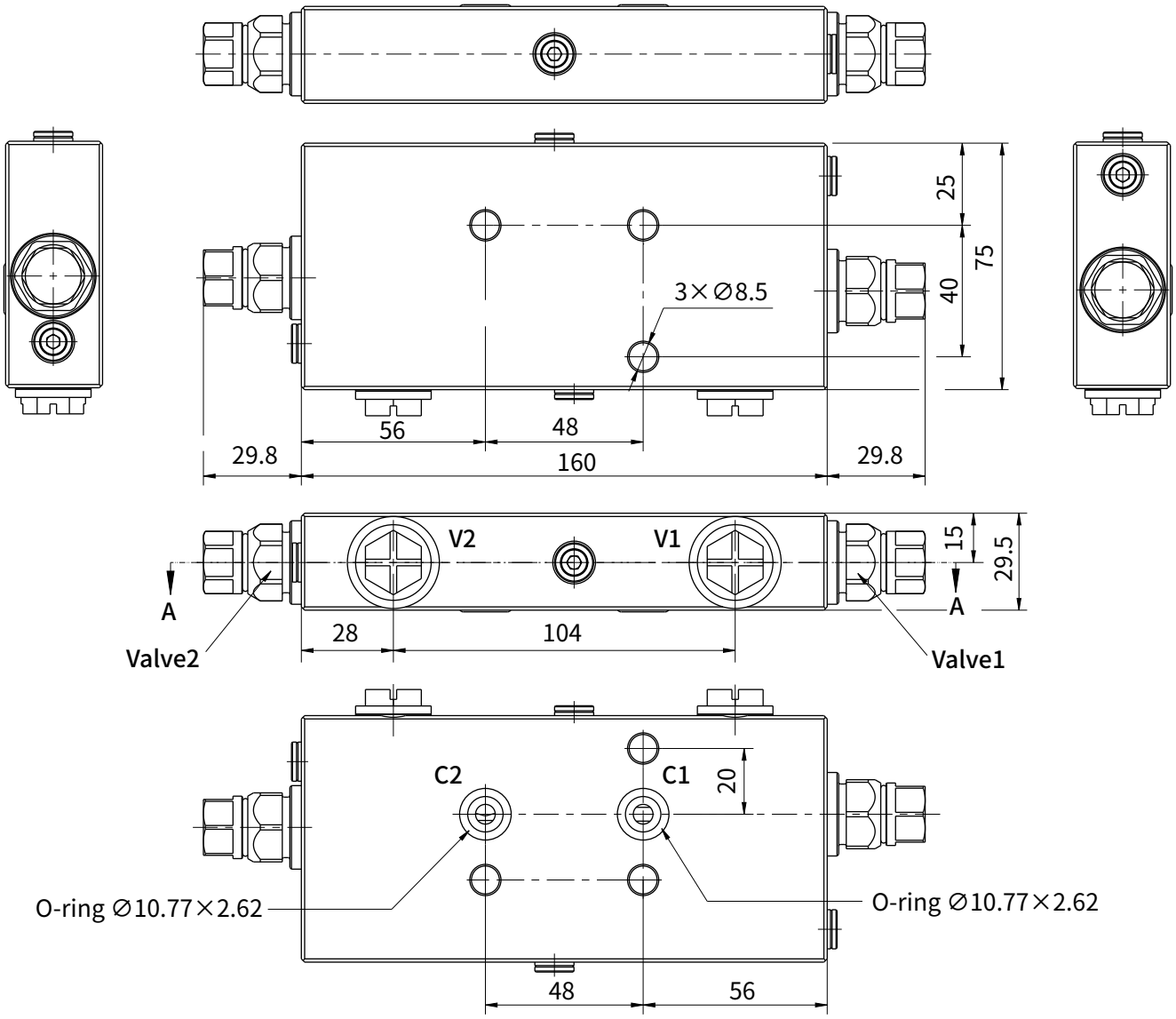

FBRC08E

Counterbalance Valve
for Floating Cylinder

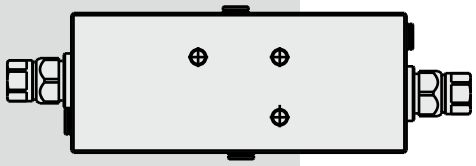

Drift Diameter	Flow	Pressure	Pilot Ratio	Material
08	30 L/min	350 bar	4:1	Aluminium

Graphic symbol

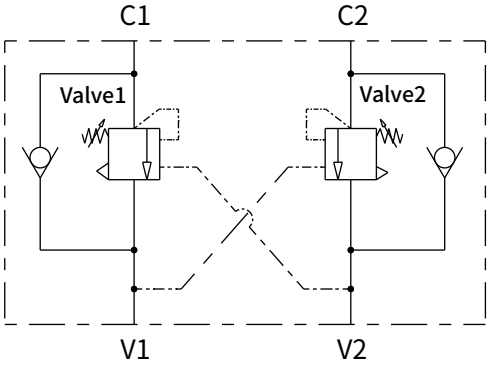

Outline Dimension

(Dimensions in mm)

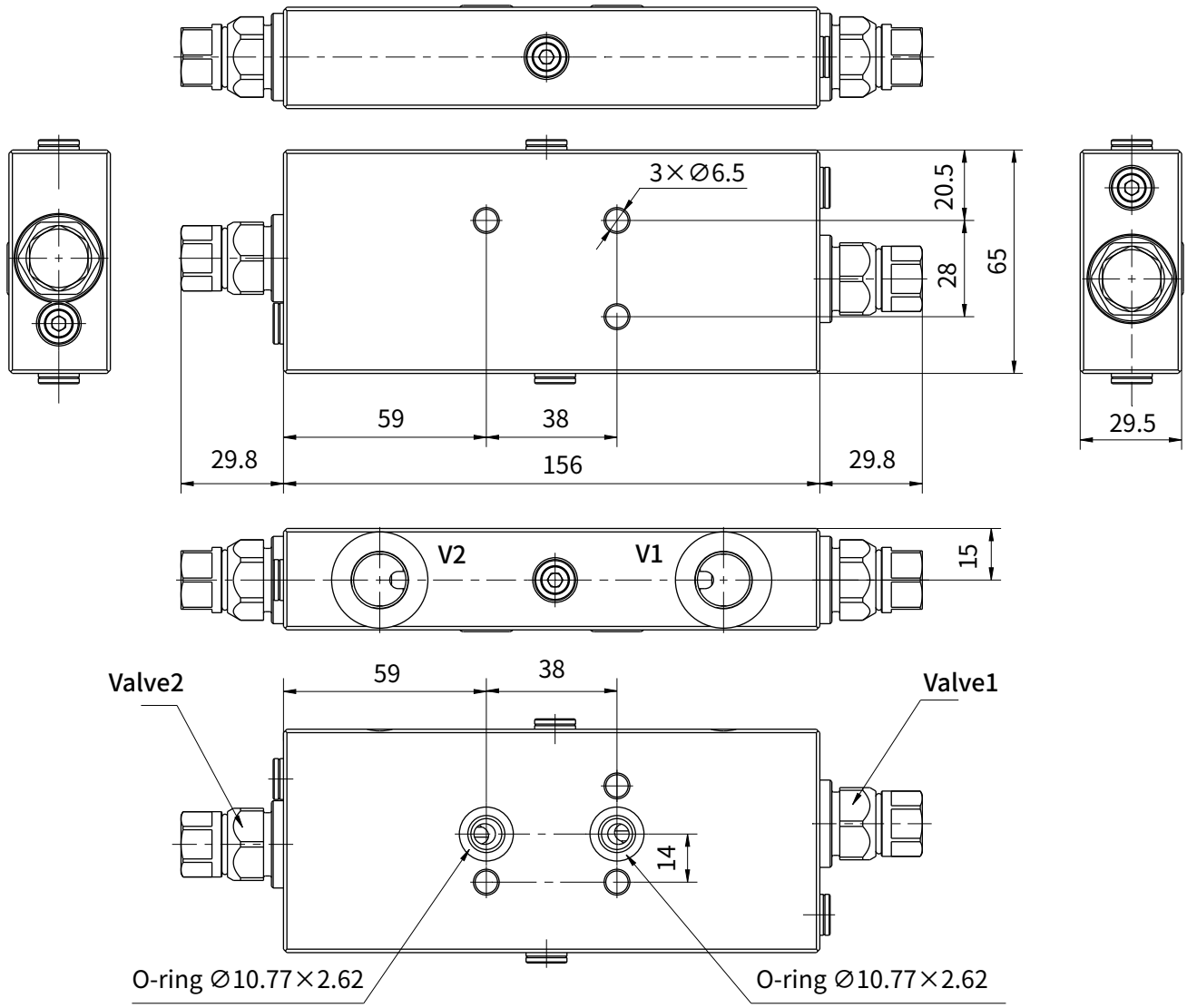

FBRC16F

Counterbalance Valve for Boom

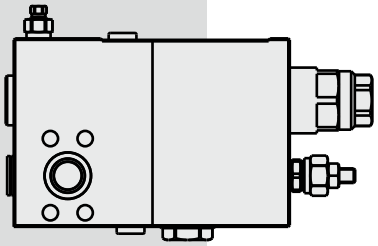

Drift Diameter	Flow	Pressure	Setting Pressure			Material
			Valve1	Valve2	Valve3	
16	⩽ 250 L/min	⩽ 420 bar	9 bar	20 bar	350 bar	Steel

Graphic Symbol

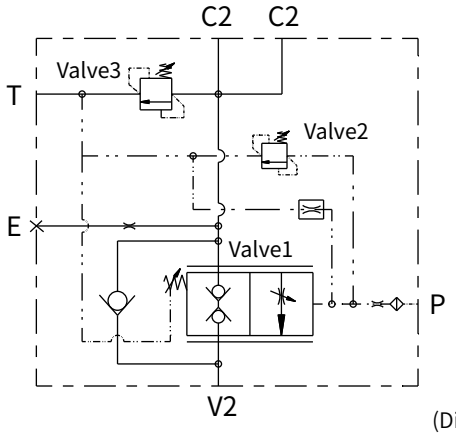

Outline Dimension

(Dimensions in mm)

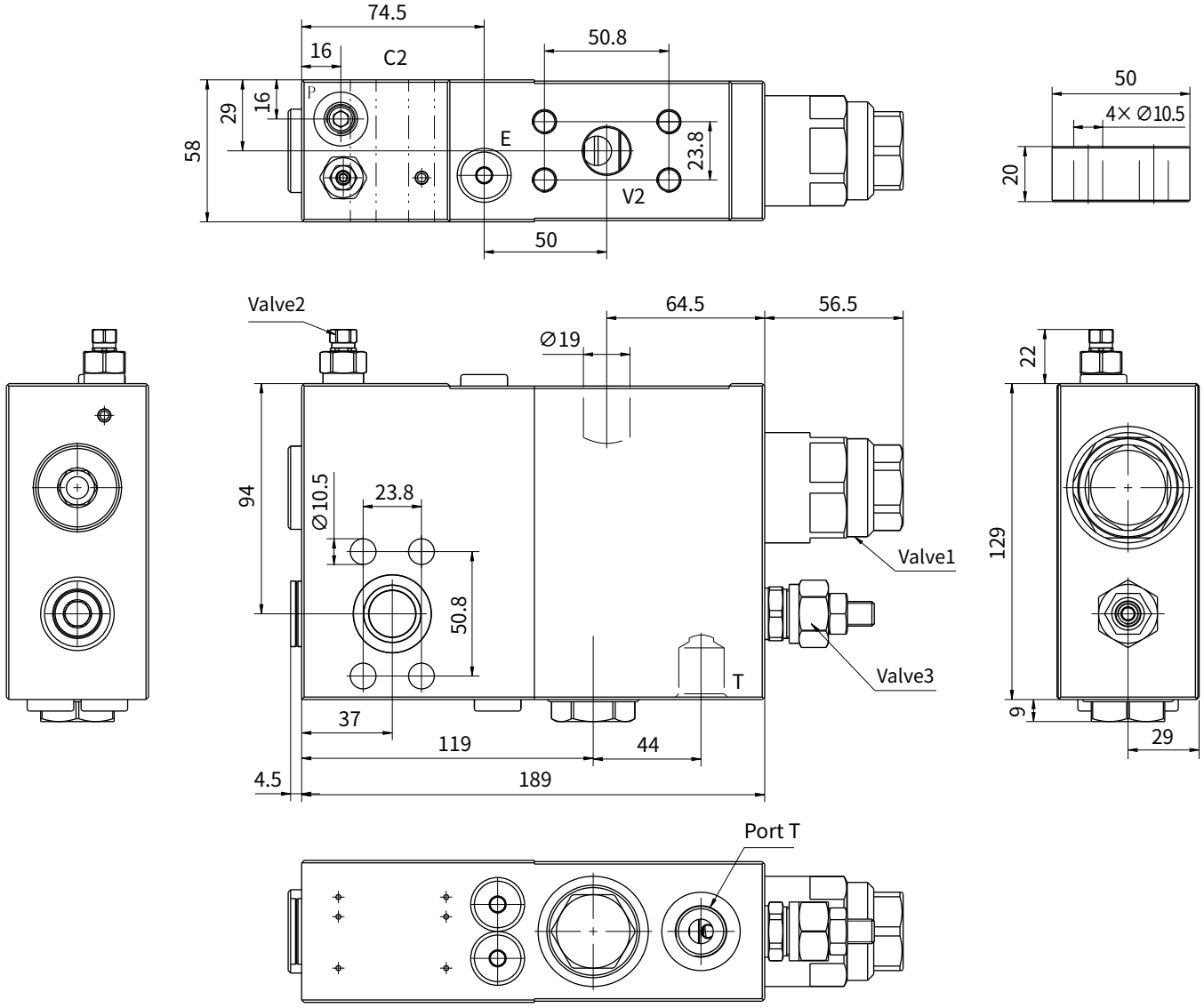

FBRC25F

Counterbalance Valve
for Telescopes

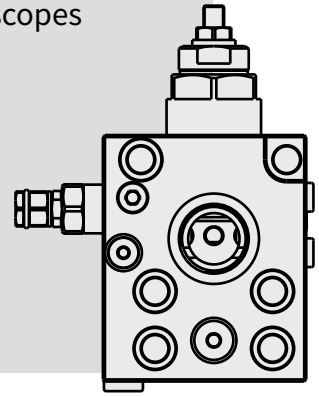

Drift Diameter	Flow	Pressure	Pilot Ratio (Valve1)	Pressure Range (Valve2)	Material
25	320 L/min	350 bar	8:1	50-150 bar	Steel

Graphic Symbol

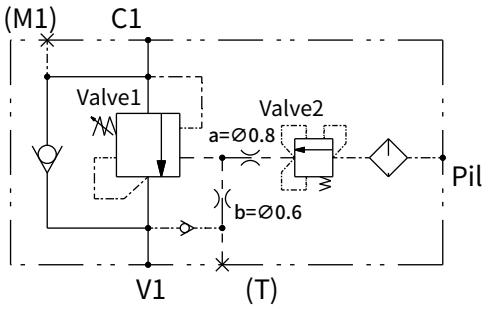

Outline Dimension

(Dimensions in mm)

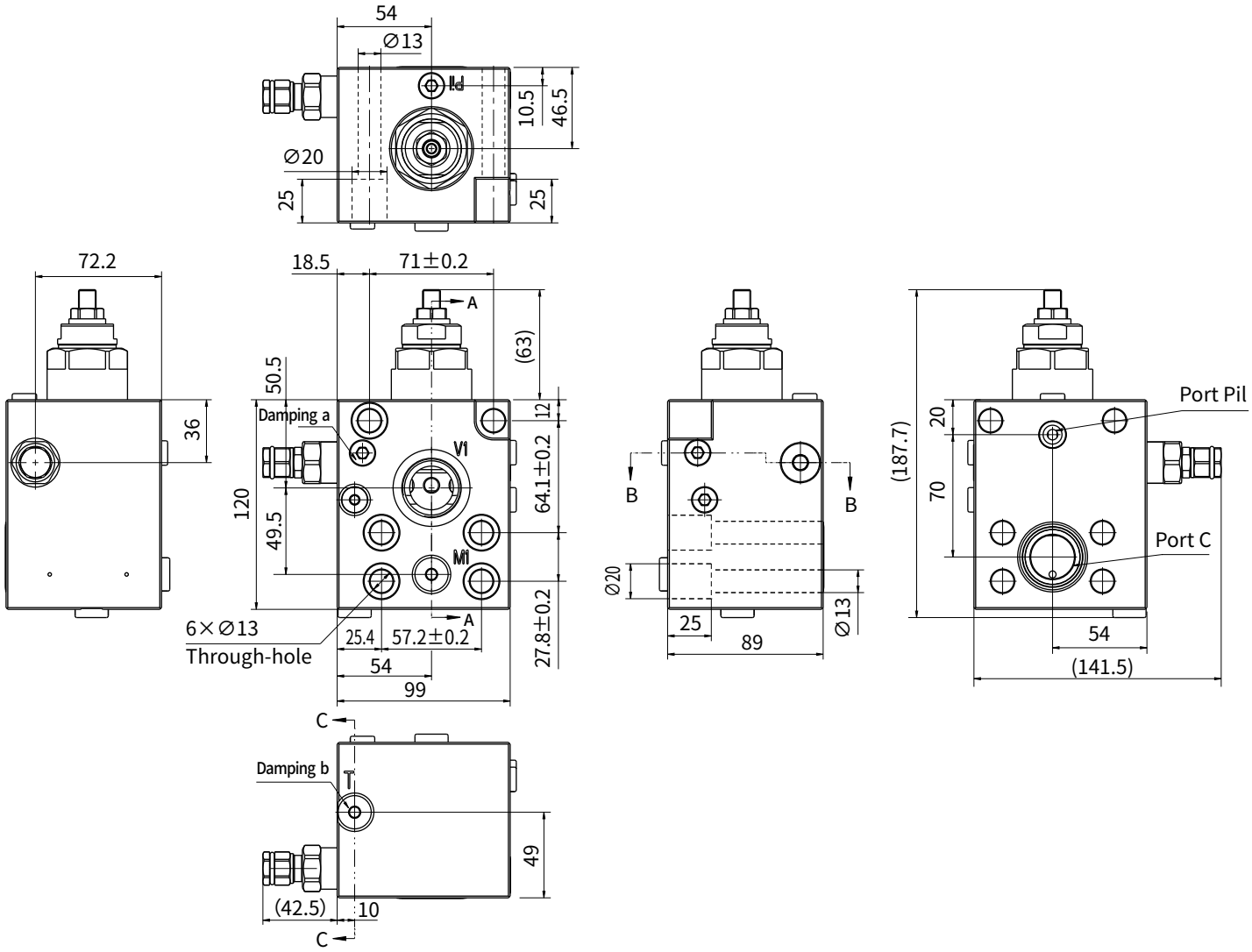

FBRC10E

Pipe Burst Safety Valve

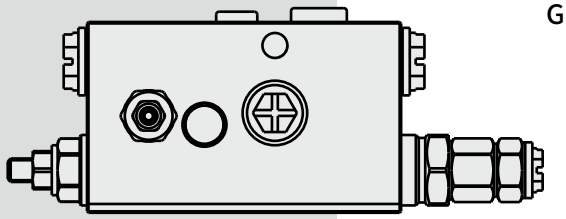

Drift Diameter	Flow	Pressure	Relief Valve1 Pressure Range	Balance valve2 Pressure Range	Material
10	⩽ 50 L/min	⩽ 420 bar	150-420 bar	3-15 bar	Steel

Graphic symbol

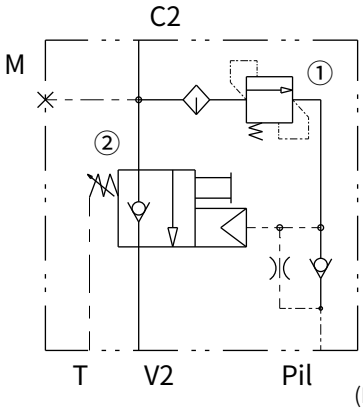

Outline Dimension

(Dimensions in mm)

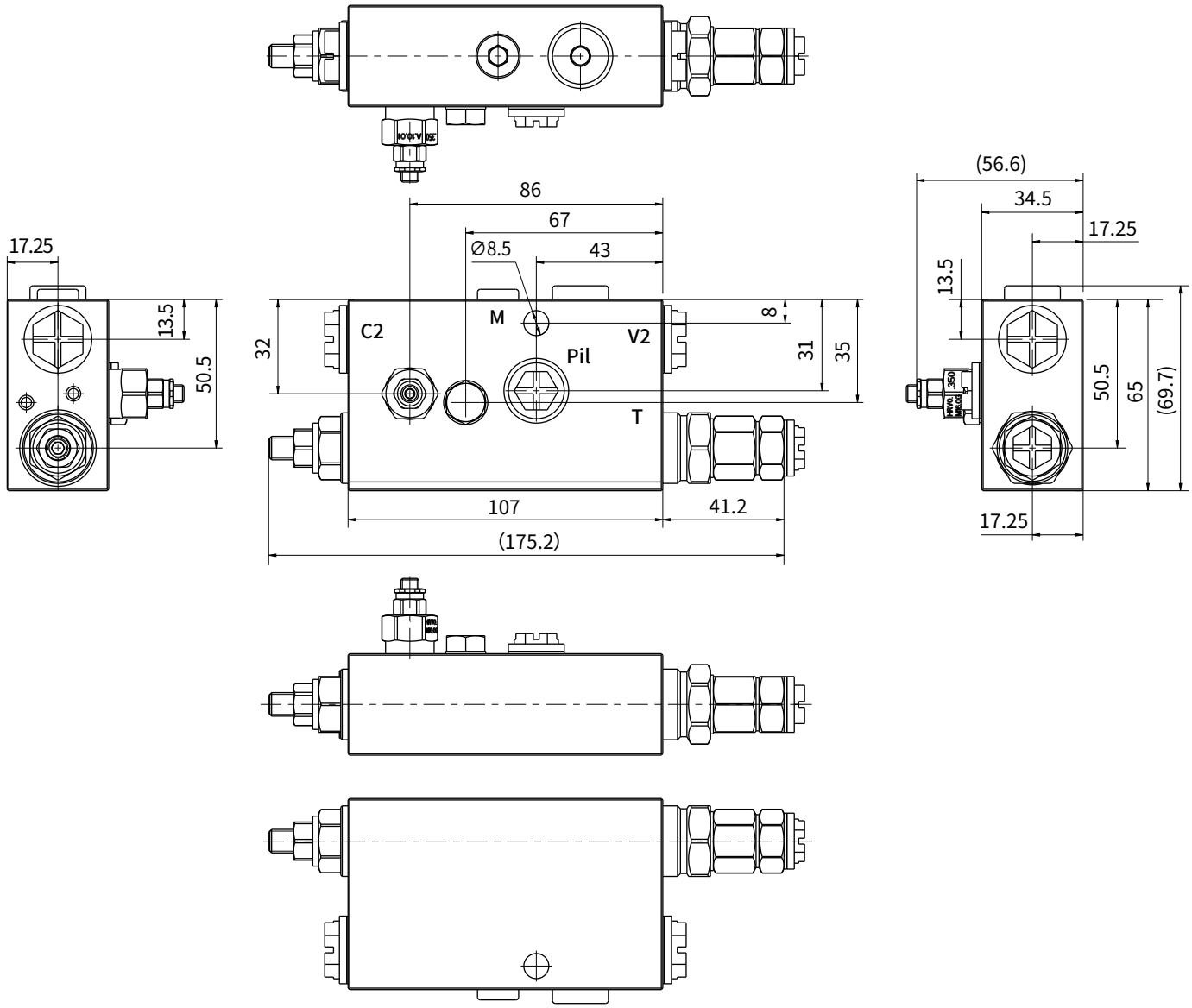

FBRC12E

Pipe Burst Safety Valve

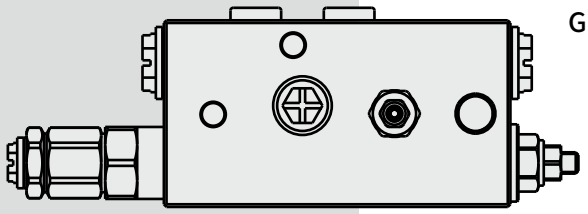

Drift Diameter	Flow	Pressure	Relief Valve1 Pressure Range	Balance valve2 Pressure Range	Material
12	⩽ 120 L/min	⩽ 420 bar	150-420 bar	3-15 bar	Steel

Graphic symbol

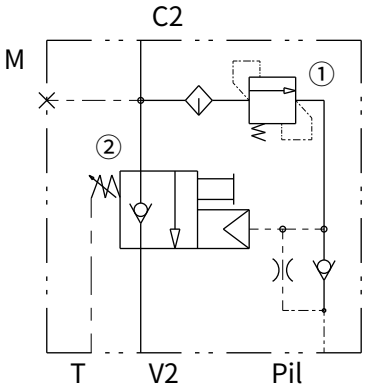

Outline Dimension

(Dimensions in mm)

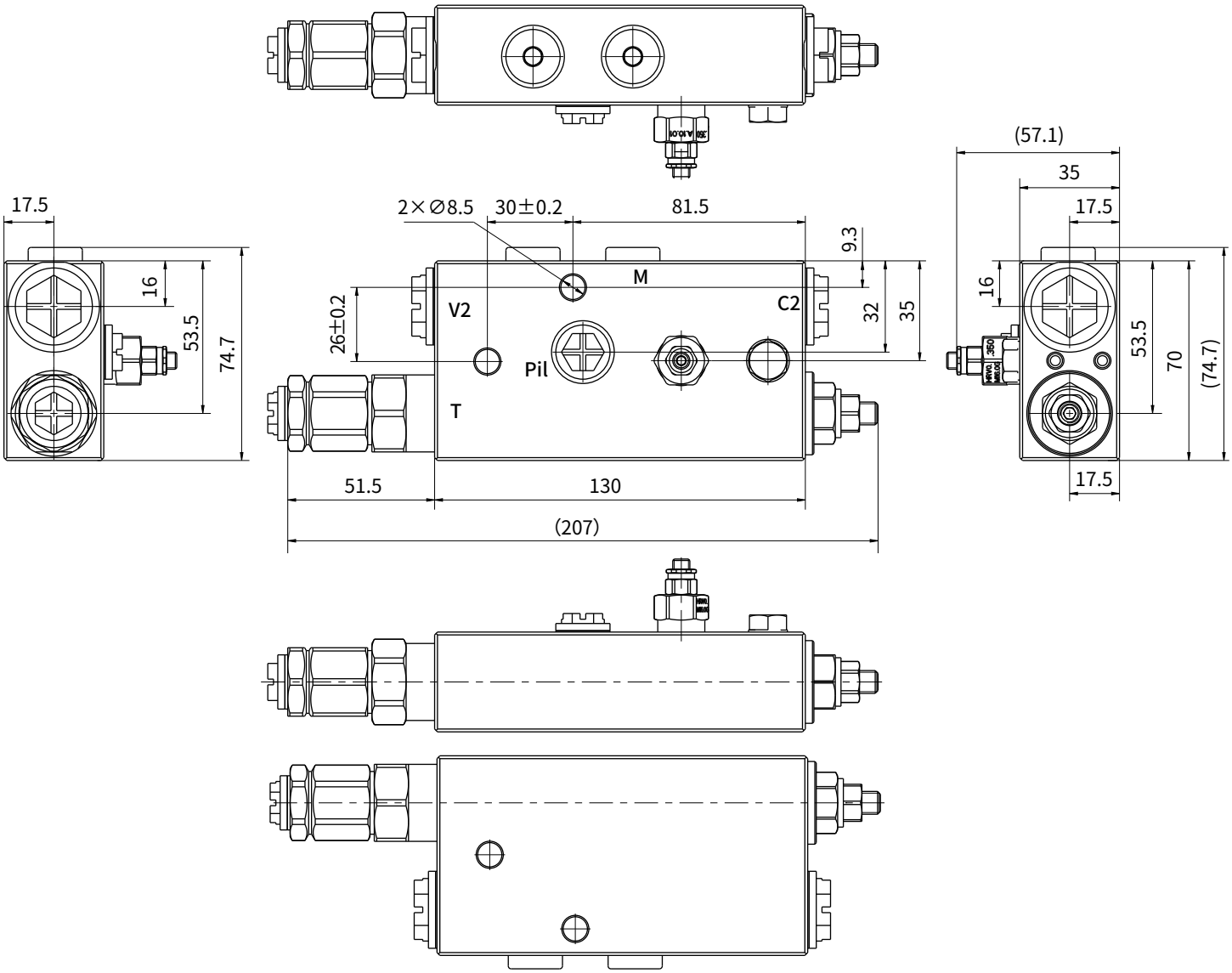

FBRC15E

Pipe Burst Safety Valve

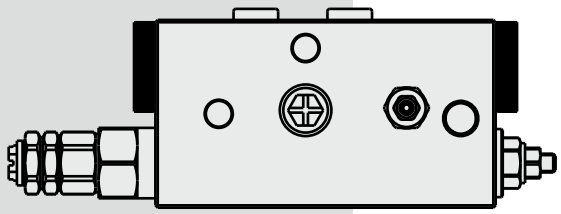

Drift Diameter	Flow	Pressure	Relief Valve1 Pressure Range	Balance valve2 Pressure Range	Material
10	⩽ 150 L/min	⩽ 420 bar	150-420 bar	7-20 bar	Steel

Graphic symbol

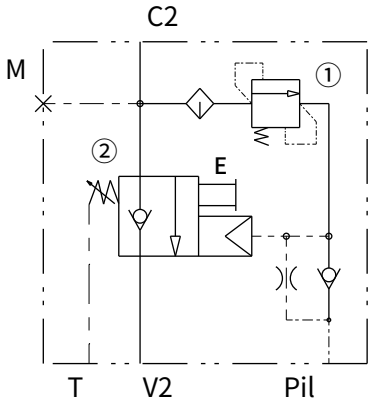

Outline Dimension

(Dimensions in mm)

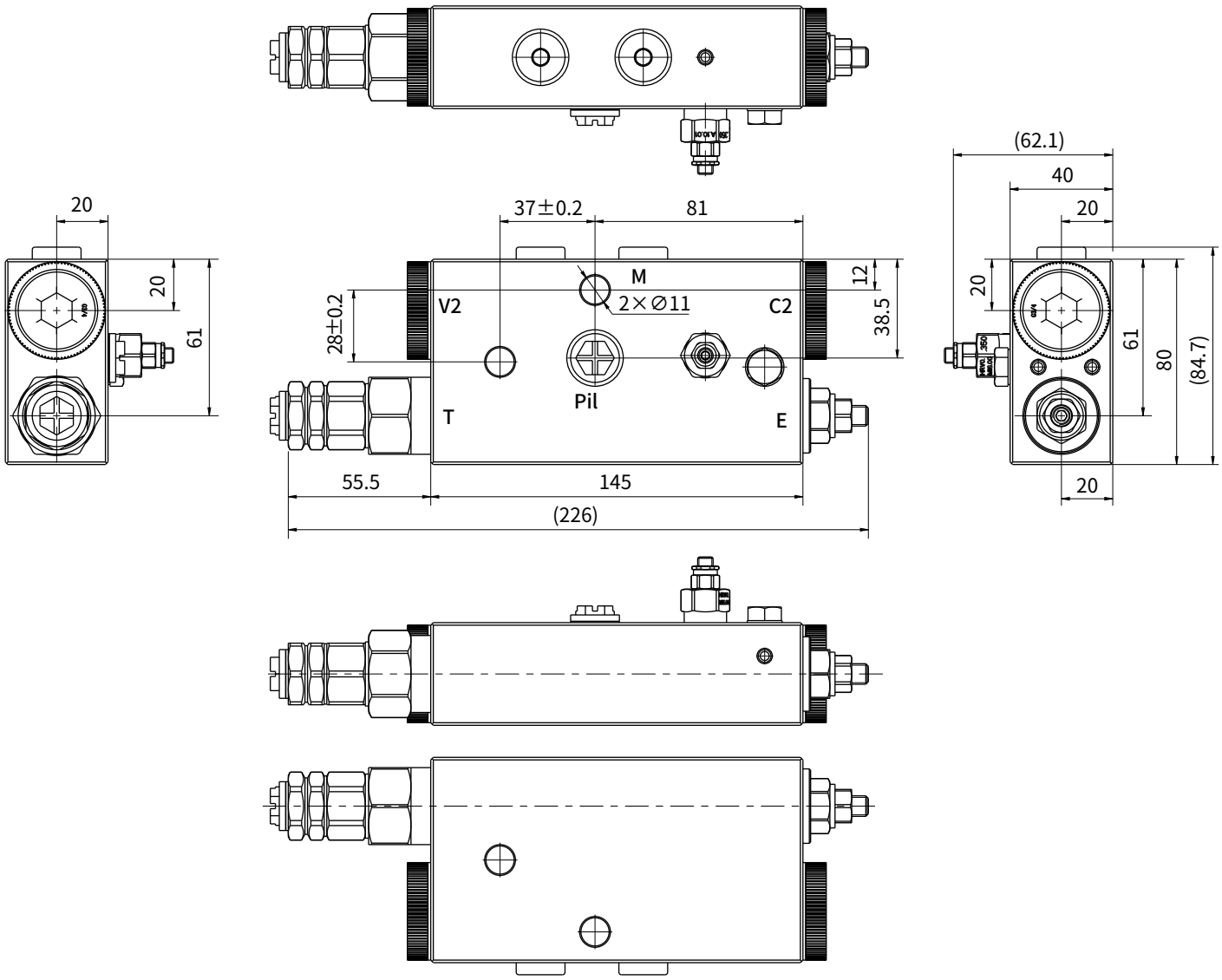

Hengli hydraulic Co.,Ltd.

ADD: No.99 Longqian Road, Wujin District,
Changzhou 213167, China

TEL: +86 400 101 8889 FAX: +86 519 8615 9988

E-mail: hengli@henglihydraulics.com

Hengli America

ADD: 580 Crossroads Parkway, Bolingbrook, Illinois 60440

TEL: +01 630 995 3674

E-mail: sales@hengliamerica.com

Hengli Germany

ADD: Sperenberger Straβe 13D-12277 Berlin

TEL: +49 (30) 72088-0 FAX: +49 (30) 72088-44

E-mail: info@inlinehydraulik.com

Hengli Japan

ADD: 7F Kyoei Building, 2-1-19 Shibadaimon,
Minato-Ku, Tokyo, 105-0012, Japan

TEL: +81 03 6809 1696 FAX: +81 03 6809 1698

E-mail: hl_zhaozhen@163.com

Hengli India

ADD: PAP-B-67/1,Bhamboli-Varale Chakan MIDC Phase2,
Pune 410505

TEL: +0091 98456 73856

E-mail: sudhindra.sabnis@henglihydraulics.com

Hengli Hydraulic / Product Application Dept.
Printing Date HL 2023-03

The data indicated in this brochure is only used for the description of products.
Our products have been in continuous development and innovation. Application of the information in this brochure is not limited to special condition or applicability in particular industry. If there is any question, welcome to call to consult.

Please scan the QR code to login our website for more information.