1.1

HP5V SERIES

Swash-plate Type
Axial Piston Variable Displacement Pump

HP5V series piston pump is high pressure open circuit axial piston pump specially designed with a new structure, and has lighter weight, higher power density, and longer life compared with HP3V pump.

Apply to open hydraulic circuit

Displacements (cc/rev):	18	(S)28	(S)45	45	60	(S)63	76	85	(S)85	105
Rated pressure (bar):	280	250	210	320	250	210	320	280	210	350
Peaking pressure (bar):	350	315	250	350	280	250	350	320	250	400

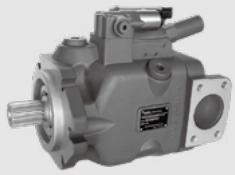

Contents

Features

- Variable pump in swash-plate design for open circuit.
- High continuous pressure.
- Exceptional self-priming capability.
- Available with American (SAE) and Japanese (JIS) mounting flanges and shafts.
- Excellent reliability and long life.
- High power to weight ratio.
- Variety of control options.
- Optional through drive.
- Quick control response.
- Low pressure pulsation and low noise.
- Developed for engineering, mobile vehicles, industrial, other industrial application and agricultural machinery.

Technical Data

Size		18	S28	S45	45	60	S63	76	85	S85	105
Displacement (cc/rev)		18	28	45	45	60	63	76	85	85	104.3
Pressure	Rated pressure (bar)	280	250	200	320	250	210	320	280	210	350
	Peak pressure (bar)	350	315	250	350	280	250	350	320	250	400
Rotation speed	Max for self-priming[*1] (rpm)	3300	3000	2940	2700	2400	2632	2400	2400	2700	2200
	Max[*2] (rpm)	3900	3600	3000	3250	3000	3000	3000	3000	3140	2600
Weight (Kg)		15.9	17	15	23	23	30	28	28	-	45
Quantity of oil to fill pump case (L)		0.4	0.55	0.3	0.6	0.6	0.6	0.8	0.8	0.8	1
Temperature Range (°C)		-20~95									
Viscosity Range (mm^2/s)		10-1000[*3] (The best use of viscosity range 16~36 mm^2/s)									

Permissible through drive torque								
Input shaft code	S1	S2	S3	S4	S5	K1	K2	K3
Input torque rating (Nm)	171	272	552	925	1470	145	230	430

1. Steady state suction pressure should be 0 bar and above(at normal condition);
2. If suction pressure less than 0 bar, Boost pressure should be required;
3. In case of 200-1000mm^2/s, please allow system to warm up before using machine.

Type introduction

HP5V	76	/	A	V	1	O	R	B2	S1	M	S	—	L1/1	—	T
①	②		③	④	⑤	⑥	⑦	⑧	⑨	⑩	⑪		⑫		⑬

Product series

①	Product series	HP5V
	Compact product series	HP5VS

Displacement

②	Displacement cc/rev	18	S28	S45	45	60	S63	76	85	S85	105

Design series

③	Design series	A Series	A

Seals

④	Seals	FKM (Viton rubber: DIN ISO 1629)	V
		NBR (Nitrile rubble :DIN ISO 1629)	N

Hydraulic circuit

⑤	Hydraulic circuit	Open circuit	1

Through Drive

			18	S28	S45	45	60	S63	76	85	S85	105	代号
⑥	Without through drive		●	●	●	●	●	●	●	●	●	●	O
	Without through drive, SAE flange ports, rear			●		●	●		●	●			NO1
	Without through drive, Thread ports, rear					●	●						NO2
	Standard configuration with gear pump 6cc/rev					●	●		●	●		○	X1
	Standard configuration with gear pump 10cc/rev					○	○		○	○		○	X2
	Mounting Flange	Spline shaft											
	SAE A 82-2	SAE J744-16-4 9T 16/32DP				●	●		●	●		●	A1
		SAE J744-19-4 11T 16/32DP				○	○		●	●		●	A2
	SAE B 101-2	SAE J744-22-4 13T 16/32DP				●	●		●	●		●	B1
		SAE J744-25-4 15T 16/32DP				●	●		●	●		●	B2
	SAE C 127-2	SAE J744-32-4 14T 12/24DP							●	●		●	C1
		SAE J744-38-4 17T 12/24DP										●	C2
	SAE C 127-4	SAE J744-32-4 14T 12/24DP							●	●		●	C3
		SAE J744-38-4 17T 12/24DP										●	C4

Type introduction

Direction of Rotation

⑦	Viewed on drive shaft	Clockwise	R
		Counter-clockwise	L

Input Mounting flanges

	Mounting flanges size	18	S28	S45	45	60	S63	76	85	S85	105	Code
⑧	SAE B 82-2	●										A2
	SAE B 101-2		●	●	●	●	●	●	●	●		B2
	SAE C 127-2							●	●		●	C2
	SAE C 127-4							●	●		●	C4
	ISO 2 holes				●	●		●	●		●	A

Input Shaft

	Shaft size	18	S28	S45	45	60	S63	76	85	S85	105	Code
⑨	SAE J744-19-4 11T 16/32DP	●										S0
	SAE J744-22-4 13T 16/32DP		●	●	●	●	●					S1
	SAE J744-25-4 15T 16/32DP				●	●		●	●	●		S2
	SAE J744-32-4 14T 12/24DP							●	●		●	S3
	SAE J744-38-4 17T 12/24DP										●	S4
	SAE J744-44-4 13T 8/16DP										●	S5
	SAE J744-22-1 B6.35×28 straight shaft											K1
	SAE J744-25-1 B6.35×32 straight shaft				●	●						K2
	SAE J744-32-1 B7.94×44 straight shaft							●	●			K3
	ISO straight shaft (non through shaft) (used with flange A)				●	●		●	●		●	P

Thread type of Flange Fixing Port

⑩	Thread type	Metric threads	M
		UNC threads	S

Connection type (except inlet and outlet port)

⑪	UNC port, ISO 11926	A
	BSPPG thread, JIS B2351	G
	Metric port, ISO 9974	M

Type introduction

Control type

	Control type			18	S28	S45	45	60	S63	76	85	S85	105	Code
⑫	Apply to constant displacement pump			○	○		○	○		○	○	●	○	N
	Pressure cut-off	Only pressure control		○	●		●	●		●	●	●	●	DR
		Electro-hydraulic pressure control, negative control		○	●		●	●		●	●	●	●	ER2
		+Load sensing		○	●	●	●	●	●	●	●	●	●	L1
		Remotely operated		○	●		●	●		●	●	●	●	P0
		+Electric proportional displacement. Deutsch DT04-2P ; 2 contact pin, (without suppressor diode)	12V		●		●	●		●	●	○	●	ED1
			24V											ED2
	Power Control	Pressure cut-off+ Load sensing		●	●		●	●		●	●	○	●	L1/1
		Remotely operated+ Load sensing		●	●		●	●		●	●	○	●	P0/1
		Electrically (negative control) +Pressure cut-off+ Load sensing. Deutsch DT04-2P ; 2 contact pin, (without suppressor diode)	12V	●	●		●	●		●	●	○	●	L1/1-E1
			24V											L1/1-E2
		+Load sensing										○		LP1

Application Conditions

	Application	18	S28	S45	45	60	S63	76	85	S85	105	Code
⑬	Apply to excavator	●	●		●	●		●	●		●	T
	Other mobile machinery, construction machinery, industrial application, agricultural machinery	●	●	●	●	●	●	●	●	●	●	Blank

Remark: ● = available; ○ = On request;

Regulators introduction

Code: **L1(DR)**

Control Type :

1. Load sensing
Standard setting: 15bar
Adjustment range: 10bar-21bar
(It can be set to 38 bar at most, but it is not recommended to set it too high. If you need other settings, please consult our company.)
2. Pressure Cut-off
Standard setting: 320bar
Adjustment range: 21bar-320bar

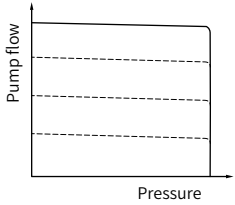

Function and Features:

Load sensing + Pressure Cut-off
The load sensing control is a flow control option that operates as a function of the load pressure to regulate the pump displacement to match the actuator flow requirement.
The load sensing control compares pressure before and after the sensing orifice and maintains the pressure drop across the orifice (differential pressure Δp) and with it the pump flow constant.
If the differential pressure Δp increases, then the pump displacement decreases, and if the differential pressure Δp decreases, then the pump displacement increases until the pressure drop across the sensing orifice in the valve is restored.
$\Delta p = Pp - P_L$
Pump displacement is controlled to match the flow requirement as a function of the system differential pressure(load pressure vs delivery pressure).In addition, there is a pressure cut off function incorporated into the control.
The pressure cut off control keeps the pressure in a hydraulic system constant within its control range even under varying flow conditions, the variable pump only moves as much hydraulic fluid as is required by the actuators. if the operating pressure exceeds the set point set at the pressure control valve, the pump displacement is automatically swivelled back until the pressure deviation is corrected.
"DR" control is on the basis of "L1" control, tighten the load sensitive valve adjust screw, and the load sensitive valve doesn't work.

Hydraulic Circuit:

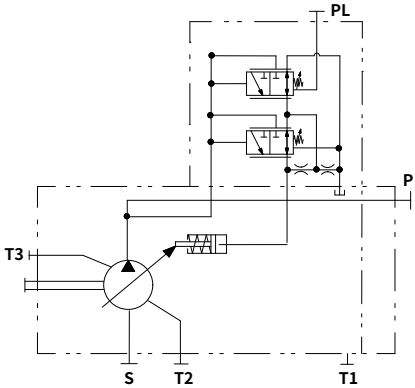

Regulators introduction

Code: P0

Control Type :

1. Load sensing
Standard setting:15bar
Adjustment range:10bar-21bar
(It can be set to 38 bar at most, but it is not recommended to set it too high. If you need other settings, please consult our company.)
2. Pressure Cut-off
Standard setting:320bar
Adjustment range:21bar-320bar

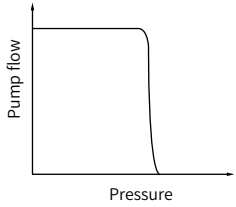

Function and Features:

P0 Pressure cut-off
The Pressure Cut-off regulator monitors outlet pressure once the pressure reaches the cut-off setting, the pump will return to minimum displacement.

Remote Control
The pump can be remotely controlled by connecting a relief valve to the PL port of the regulator. The pump can also be unload at a low pressure continue standby condition by using a solenoid valve.

Hydraulic Circuit:

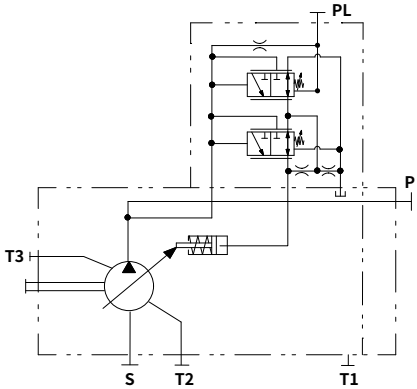

Regulators introduction

Code: □ /1

Control Type :

1. Load sensing
Standard setting: 15bar
Adjustment range: 10bar-21bar
(It can be set to 38 bar at most, but it is not recommended to set it too high. If you need other settings, please consult our company.)
2. Pressure Cut-off
Standard setting: 320 bar
Adjustment range: 21 bar-320 bar
3. Torque limiting

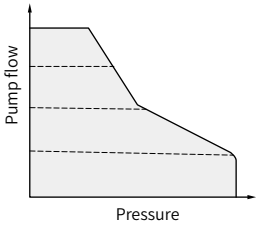

Function and Features:

_/1 Load Sense and Pressure Cut-off with Torque limiting
The L1 control functions as previously noted. In response to a rise in delivery pressure the swash plate angle is decreased, restricting the input torque. This regulator prevents excessive load against the prime mover.
The torque limit control module is comprised of two springs that oppose the spool force by the system pressure. By turning an outer and inner spring adjustment screw, the appropriate input torque limit can be set.

Hydraulic Circuit:

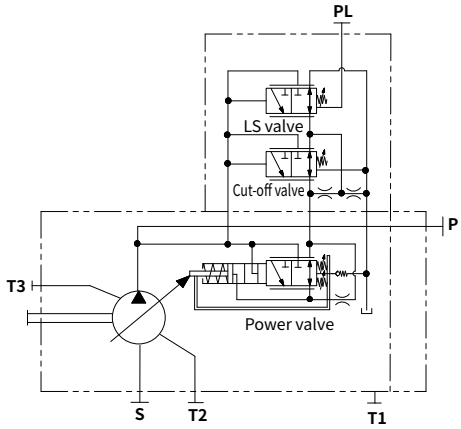

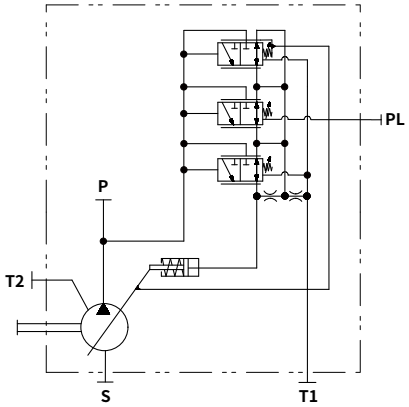

(Only HP5V18)

Regulators introduction

Code: ☐ /1-E ☐

Control Type :

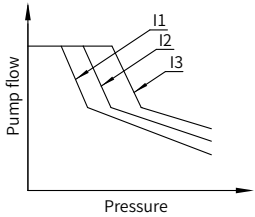

1. Load sensing
Standard setting:15bar
Adjustment range:10bar-21bar
(It can be set to 38 bar at most, but it is not recommended to set it too high. If you need other settings, please consult our company.)
2. Pressure Cut-off
Standard setting: 320bar
Adjustment range: 21bar-320bar
3. Port Pr pressure: 20bar~45bar
4. Electromagnet characters

Code	Voltage(V)	Current(A)	Resistence(Ω)	Insulation grade
L1/1-E1	12	0.80	7.3±10%(20°C)	H(180°C)
L1/1-E2	24	0.75	21.2±10%	UP to IP6K6/IPX9K

5. Connector (deutsch)
DEUTSCH: DT04-2P-E005

Function and Features:

_/1-E Load Sense and Pressure Cut-off with Torque limiting
The L1 control functions as previously noted. It controls the input torque of the pump by changing different current, specific current is related to certain input torque, thus satisfy needs of different torque on excavator

Hydraulic Circuit:

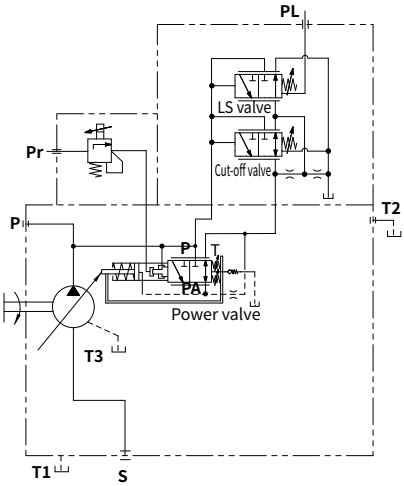

Regulators introduction

Code: **LP1**

Control Type:

1. Load sensing

Standard setting: 17bar

Adjustment range: 10bar~21bar

(It can be set to 38 bar at most, but it is not recommended to set it too high. If you need other settings, please consult our company.)

2. Torque limiting

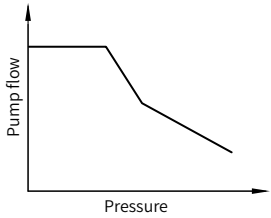

Function and Features:

_/1 Load Sense and Pressure Cut-off with Torque limiting

The L1 control functions as previously noted. In response to a rise in delivery pressure the swash plate angle is decreased, restricting the input torque. This regulator prevents excessive load against the prime mover.

The torque limit control module is comprised of two springs that oppose the spool force by the system pressure. By turning an outer and inner spring adjustment screw, the appropriate input torque limit can be set.

Hydraulic Circuit:

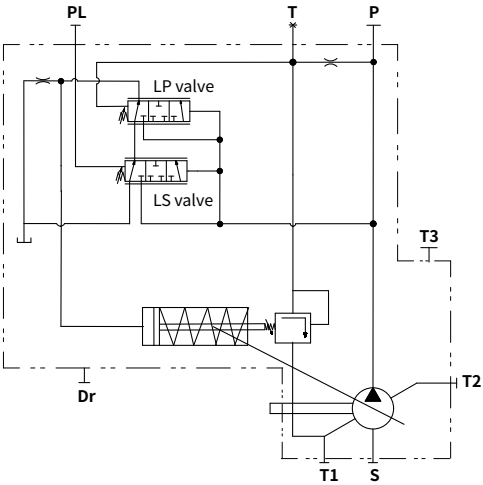

Regulators introduction

Code: **ER2**

Control Type : **Negative electro-proportional pressure control**

The ER2 valve is set to a certain pressure by a specified variable solenoid current.
This causes an increase or decrease in the pump swivel angle (flow) in order to maintain the electrically set pressure level. The pump thus only delivers as much hydraulic fluid as the consumers can take. The desired pressure level can be set steplessly by varying the solenoid current.
As the solenoid current signal drops towards zero, the pressure will be limited to Pmax by an adjustable hydraulic pressure cut-off to secure fail safe function

Static current-pressure characteristic curve ER2
(negative characteristic curve measured with pump in zero stroke)

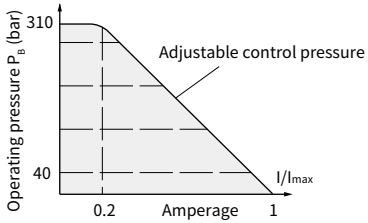

- Hysteresis static < 3 bar

Circuit diagram:

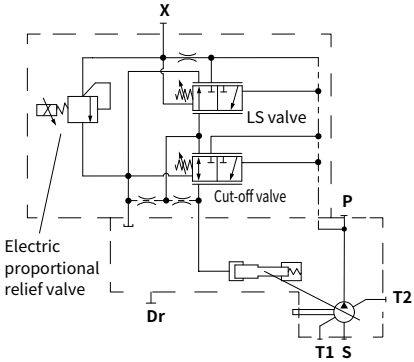

Flow-pressure characteristic curve

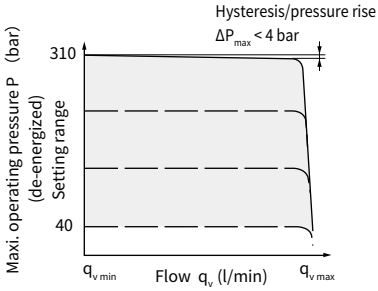

- Characteristic curves valid for n_1 = 1500 rpm and t_{fluid} = 50 °C .

Technical data, solenoid		
Voltage		24 V (±20%)
Control current	Start of control at $p_{max.}$	50 mA
	End of control at $p_{min.}$	600 mA
Limiting current		0.77 A
Nominal resistance (at 20°C)		22.7Ω
Dither frequency		100 ~ 200 Hz
Actuated time		100%
Operating temperature range at valve		-20°C to +115°C

Performance curves

HP5V45 Performance curves

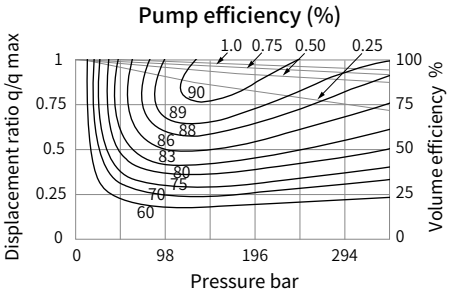

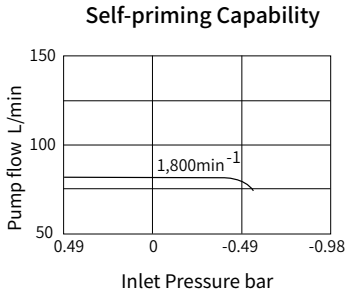

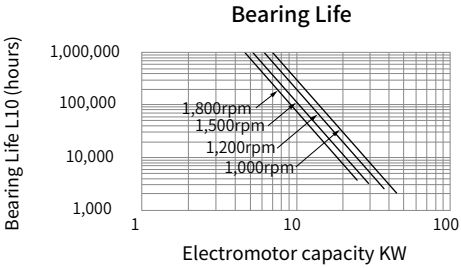

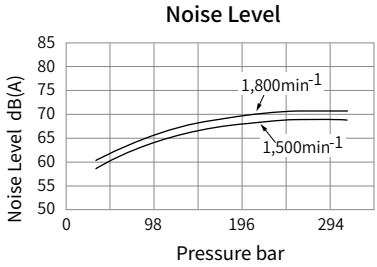

1.Values shown in above figures, excluding those for bearing life, are not guaranteed values, but mean level.Bearing life is basic rated life of calculation (reliability 90%);
2.Noise level of the pump is tested under silent circumstance (tested behind the pump about 1 meter);
3.Under actual working conditions, noise level of the pump may be higher than that in the curves.

Performance curves

HP5V60 Performance curves

Pump efficiency (%)

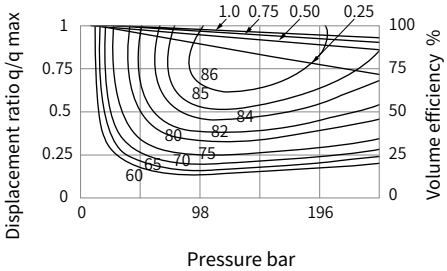

Self-priming Capability

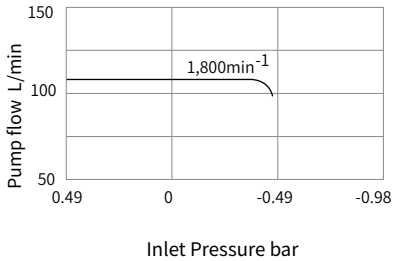

Bearing Life

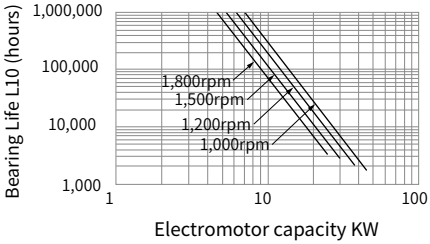

Noise Level

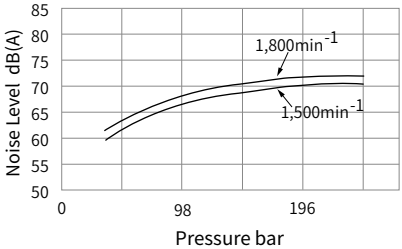

1.Values shown in above figures, excluding those for bearing life, are not guaranteed values, but mean level.Bearing life is basic rated life of calculation (reliability 90%);
2.Noise level of the pump is tested under silent circumstance (tested behind the pump about 1 meter);
3.Under actual working conditions, noise level of the pump may be higher than that in the curves.

Performance curves

HP5V76 Performance curves

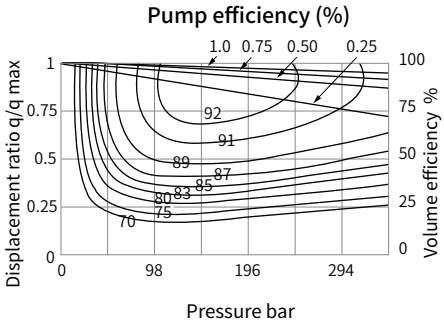

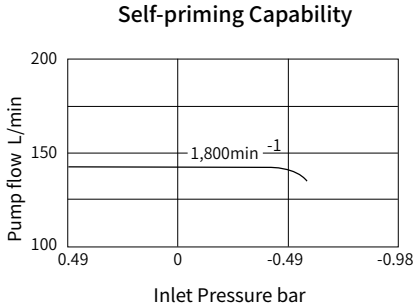

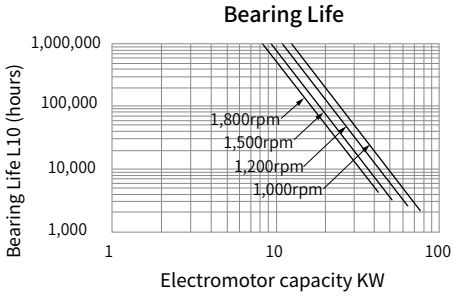

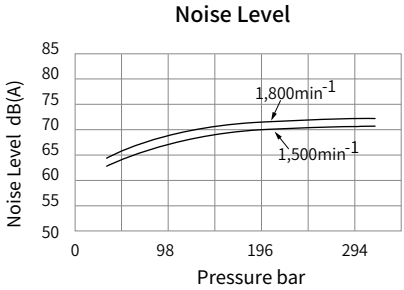

1.Values shown in above figures, excluding those for bearing life, are not guaranteed values, but mean level.Bearing life is basic rated life of calculation (reliability 90%);
2.Noise level of the pump is tested under silent circumstance (tested behind the pump about 1 meter);
3.Under actual working conditions, noise level of the pump may be higher than that in the curves.

Installation size

HP5V18 installation size

Displacement is adjustable
HP5V18 with Cut-off/Load Sense Control with torque limit (Clockwise Rotation)
For the CCW pump just reverse the inlet and outlet port.

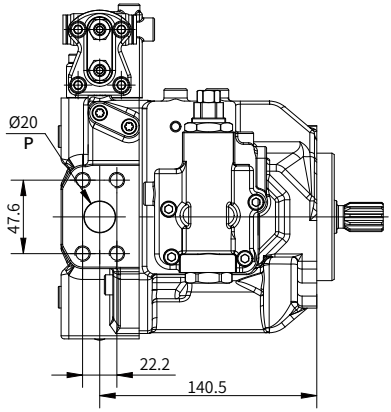

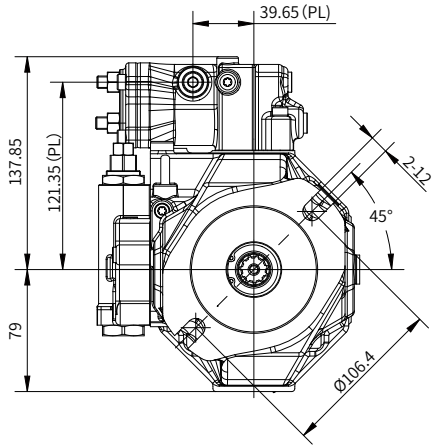

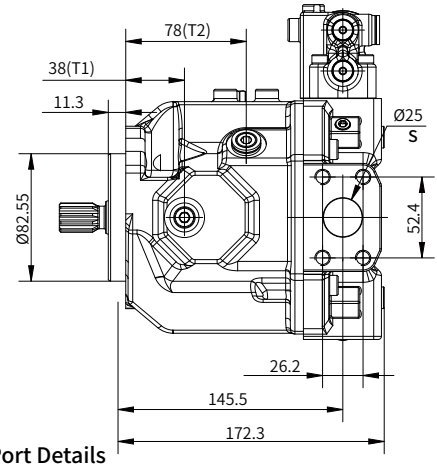

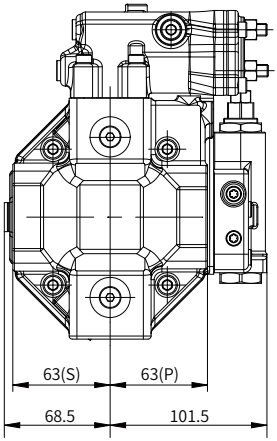

Port Details

	Port Name	Port Size and Description			Tightening Torque (N-m)
P	Working port	3/4"SAE J518C code 61 (5000psi)	M(metric)	M10×1.5 (depth 17mm)	57
S	Suction port	1"SAE J518C code 61 (3000psi)	M(metric)	M10×1.5 (depth 17mm)	57
T1、T2	Case drain port	ISO 6149 (M14×1.5)			45
PL	LS Control port	ISO 6149 (M14×1.5)			45

Installation size

HP5V18 Mounting Flange

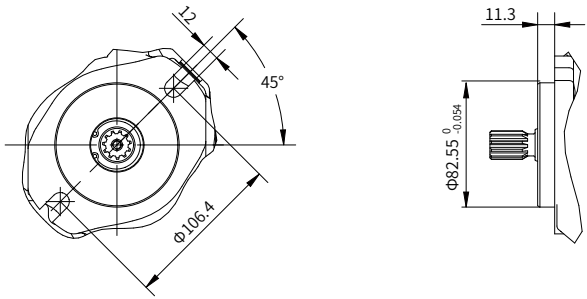

SAE "A2" type

HP5V18 Input Shaft type

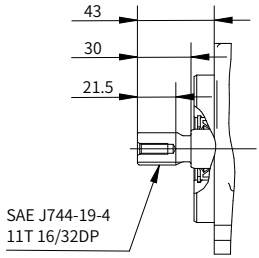

"S0" type spline shaft

Installation size

HP5VS28 installation size

Displacement is adjustable
HP5VS28 with Cut-off/Load Sense Control with torque limit (Clockwise Rotation)
For the CCW pump just reverse the inlet and outlet port.

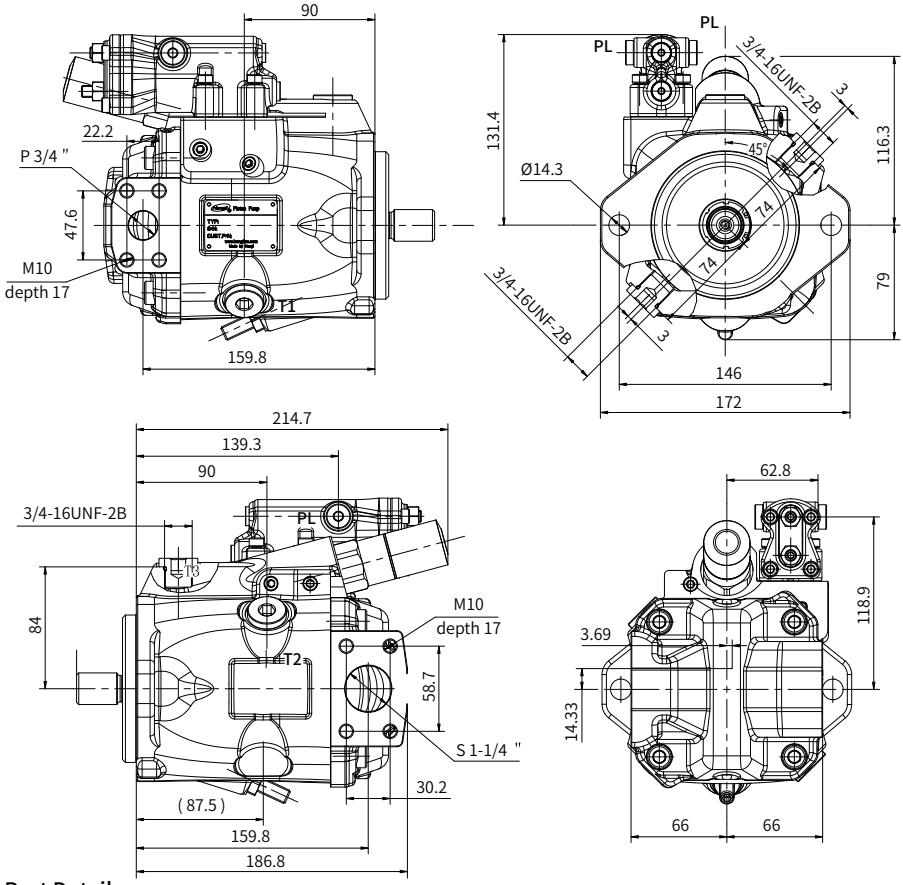

Port Details

	Port Name	Port Size and Description			Tightening Torque (N-m)
P	Working port	3/4"SAE J518C code 61 (5000psi)	M(metric)	M10×1.5 (depth 17mm)	57
			S(UNC)	3/8-16UNC-2B (depth 17mm)	
S	Suction port	1-1/4"SAE J518C code 61 (3000psi)	M(metric)	M10×1.5 (depth 17mm)	57
			S(UNC)	7/16-16UNC-2B (depth 17mm)	
T1、T2、T3	Case drain port	ISO 11926 (3/4"-16UNF-2B)			98
PL	LS Control port	ISO 11926 (7/16"-20UNF-2B)			12

Installation size

HP5VS28 Mounting Flange

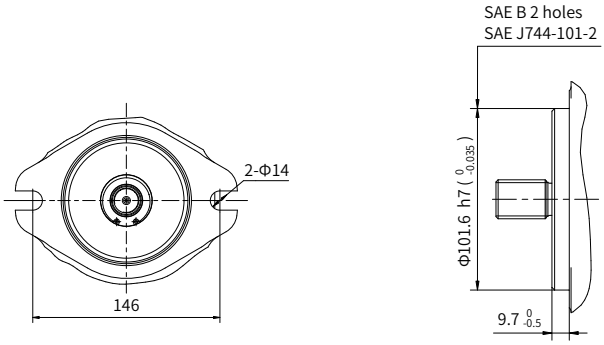

SAE "B2" type

HP5VS28 Input Shaft type

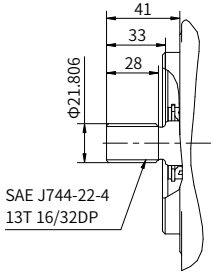

"S1" type spline shaft

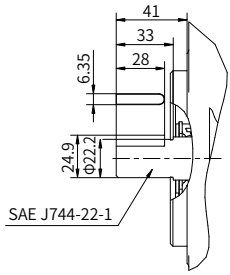

"K1" type straight shaft

Installation size

HP5VS45 installation size

HP5VS45 with Cut-off/Load Sense Control

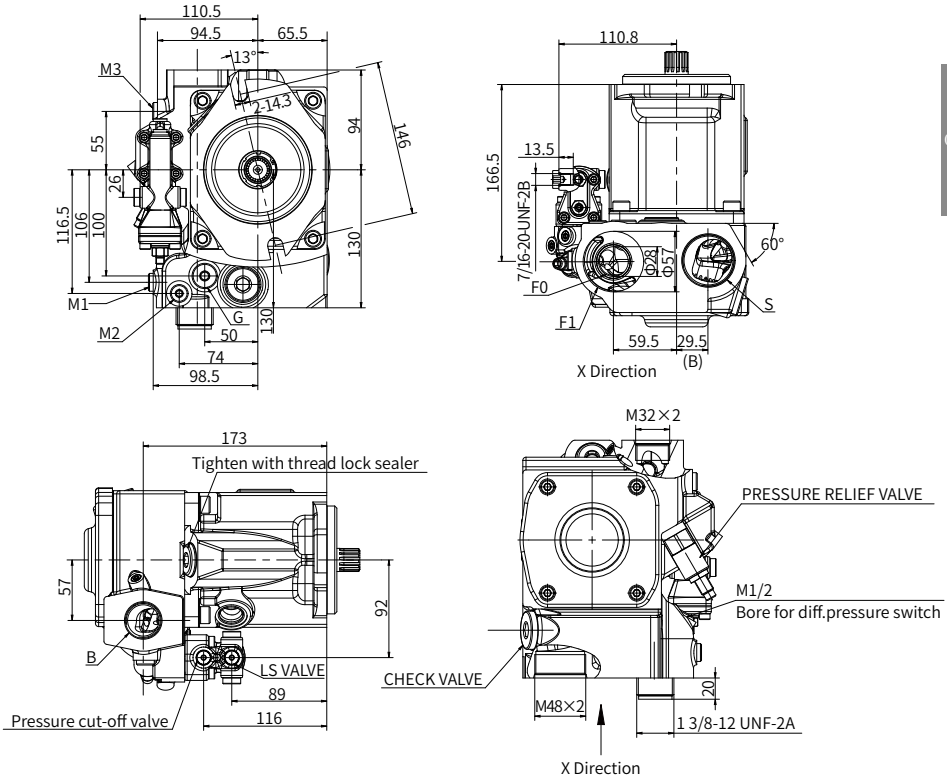

Port Details

	Port Name	Port Size and Description	Tightening Torque (N-m)
P	Working port	M33×2 (ISO 6149)	310
S	Suction port	M48×2 (ISO 6149)	420
T1	Case drain port	M22×1.5	100
PL	LS Control port	7/16-20-UNF-2B	20

Installation size

HP5VS45 Mounting Flange

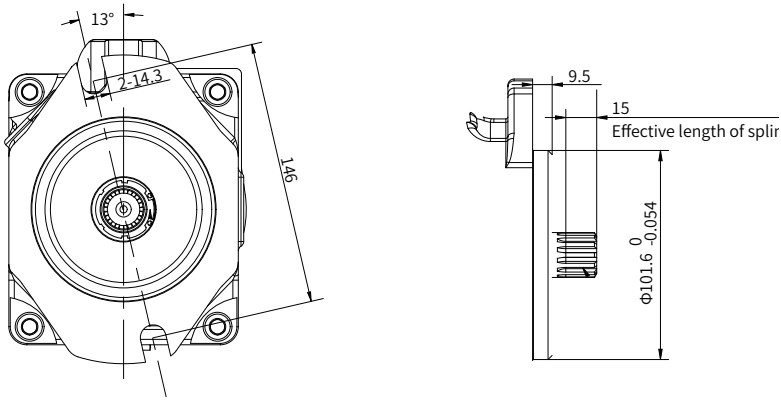

SAE "B2" type

HP5VS45 Input Shaft type

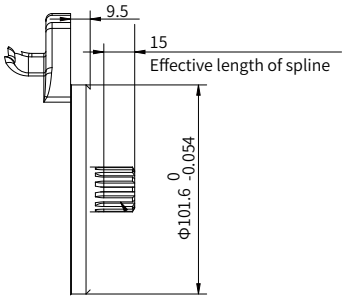

"S1" type spline shaft

Installation size

HP5V45/60 installation size

HP5V45/60 with Cut-off/Load Sense Control with torque limit (Clockwise Rotation)
For the CCW pump just reverse the inlet and outlet port.

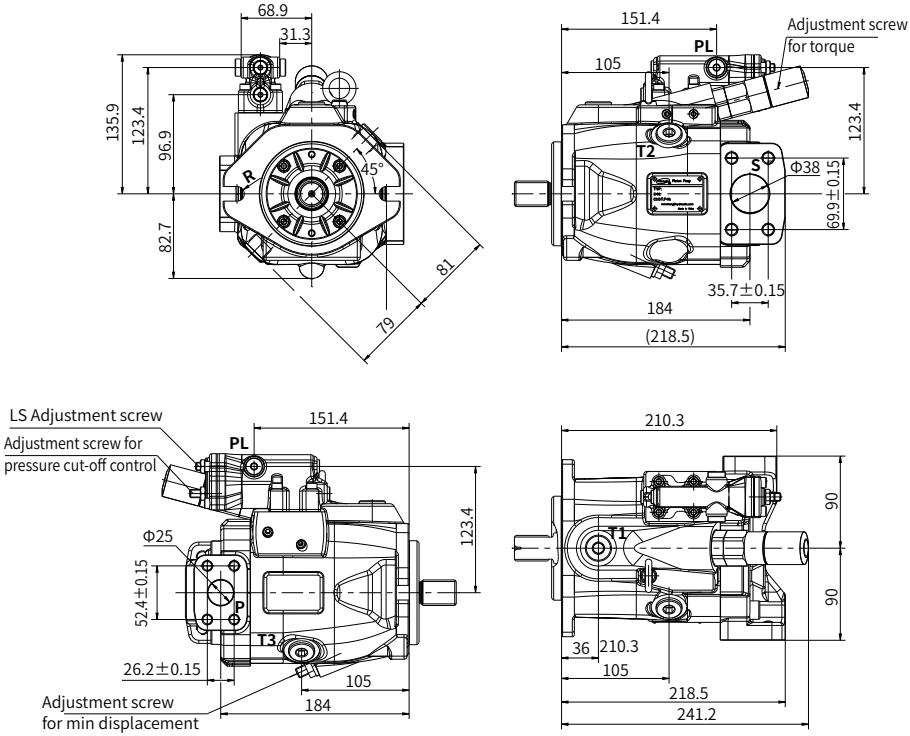

Port Details

	Port Name	Port Size and Description			Tightening Torque (N-m)
P	Working port	1"SAE J518C Code 61 (5000psi)	M (metric)	M10×1.5 (depth 17mm)	57
			S(UNC)	3/8-16UNC-2B (depth 17mm)	
S	Suction Port	1-1/2"SAE J518C Code 61 (3000psi)	M (metric)	M12×1.75(depth 20mm)	98
			S(UNC)	1/2-13UNC-2B (depth 20mm)	
T1、T2、T3	Case drain Port	ISO 11926 (7/8-14UNF-2B) depth 13mm			120
PL	LS Control Port	ISO 11926 (7/16-20UNF-2B) depth 11.5mm			12

01

Installation size

HP5V45/60 Mounting Flange

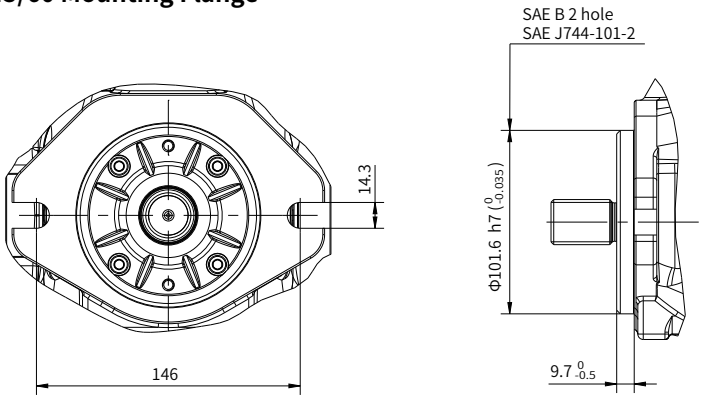

SAE "B2"type

HP5V45/60 Input Shaft type

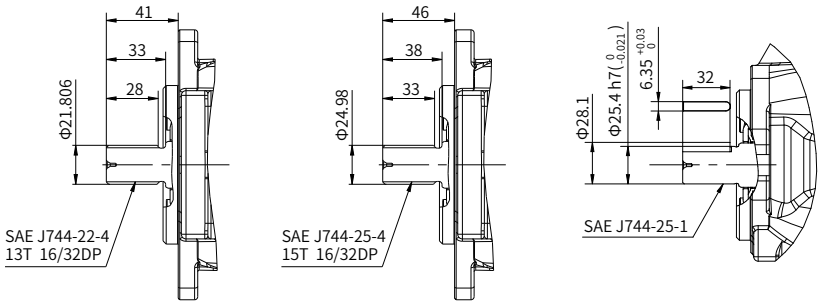

"S1"type spline shaft "S2"type spline shaft "K2"type straight shaft

Installation size

HP5VS63 installation size

HP5VS63 with Cut-off/Load Sense Control

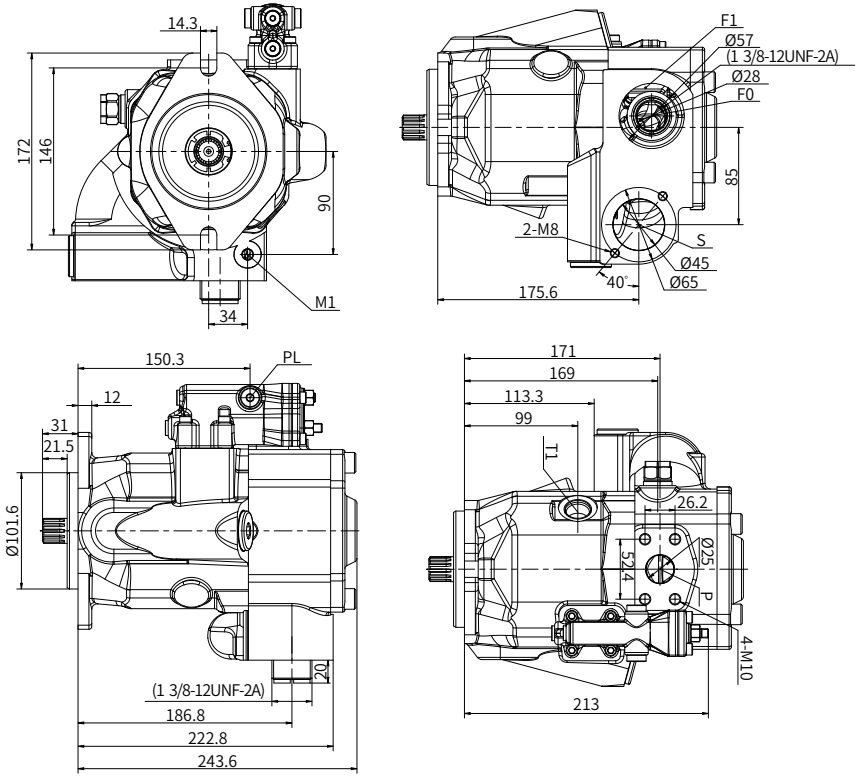

Port Details

	Port Name	Port Size and Description	Tightening Torque (N-m)
P	Working port	SAE 1" MAX.5000psi M10X1.5 (depth 17mm)	57
S	Suction Port	Φ 45；2×M8	29
T1	Case drain Port	ISO 11926 7/8"-14UNF-2B	120
PL	LS Control Port	ISO 11926 7/16"-20UNF-2B	12

Installation size

HP5VS63 Mounting Flange

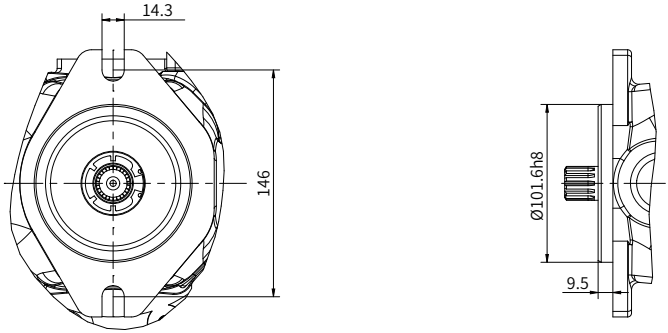

SAE "B2"type

HP5VS63 Input Shaft type

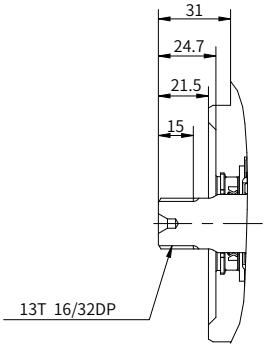

"S1"type spline shaft

Installation size

HP5V76/85 installation size

HP5V76/85 with Cut-off/Load Sense Control with torque limit (Clockwise Rotation)
For the CCW pump just reverse the inlet and outlet port.

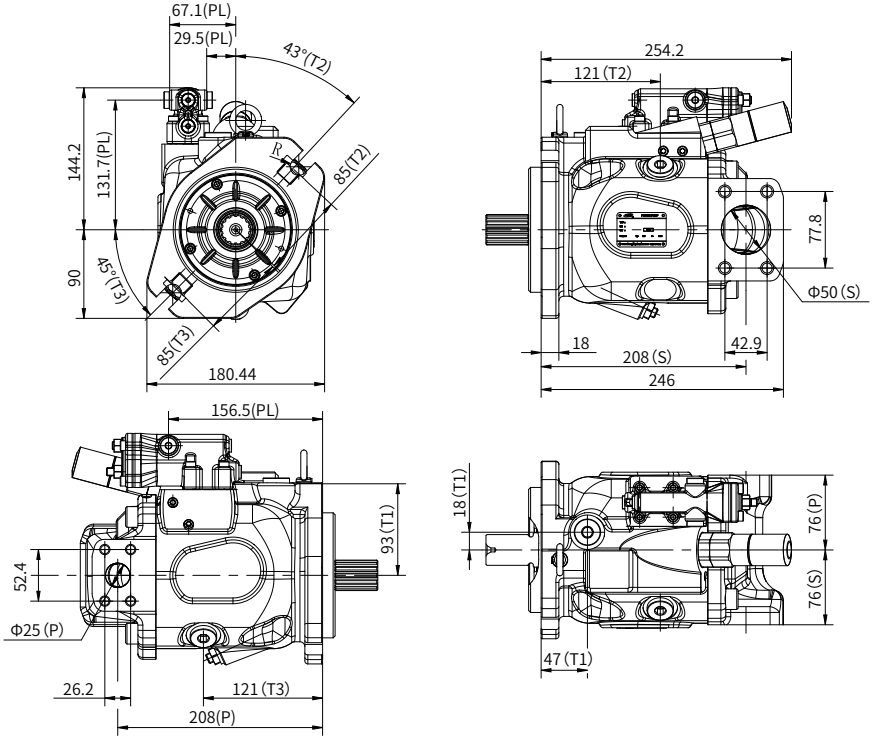

Port Details

	Port Name	Port Size and Description			Tightening Torque (N-m)
P	Working port	1"SAE J518C Code 61 (5000psi)	M (metric)	M10×1.5 (depth 17mm)	57
			S(UNC)	3/8-16UNC-2B (depth 17mm)	
S	Suction Port	2"SAE J518C Code 61 (3000psi)	M (metric)	M12X1.75 (depth 20mm)	98
			S(UNC)	1/2-13UNC-2B (depth 20mm)	
T1、T2、T3	Case drain Port	SAE J1926/1 (3/4-16UNF-2B) (depth 16 mm)			98
PL	LS Control Port	SAE J1926/1 (7/16-20UNF-2B) (depth 11.5mm)			12
Pr	Electronic control or Hydraulic control pilot	SAE J1926/1 (7/16-20UNF-2B) depth 11.5mm			12

Installation size

HP5V76/85 Mounting Flange

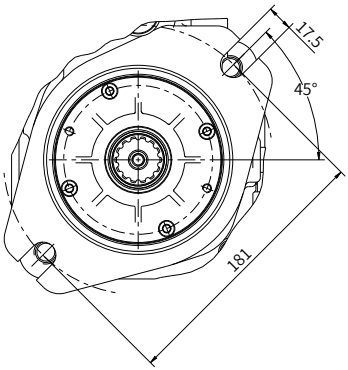

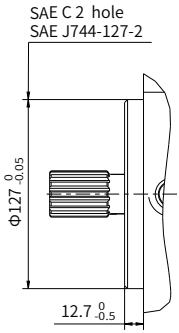

SAE "C2" type

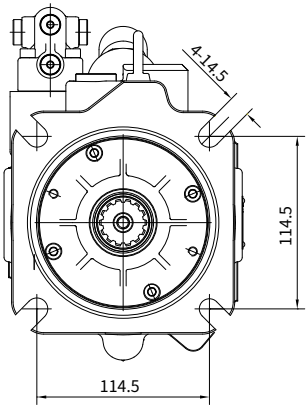

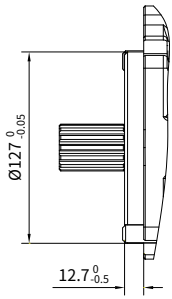

SAE "C4" type

Installation size

HP5V76/85 Input Shaft type

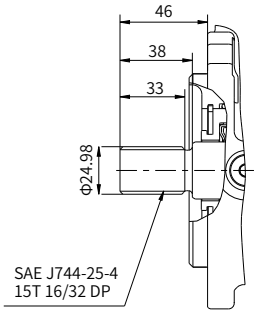

"S2" type spline shaft

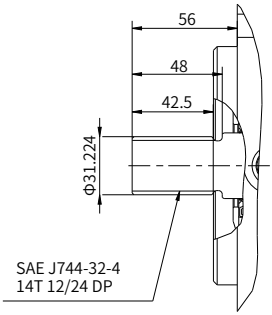

"S3" type spline shaft

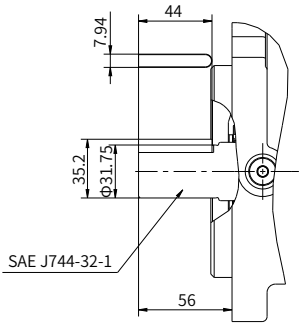

"K3" type straight shaft

Installation size

HP5VS85 installation size

HP5VS85 with Cut-off/Load Sense Control with torque limit (Clockwise Rotation)
For the CCW pump just reverse the inlet and outlet port.

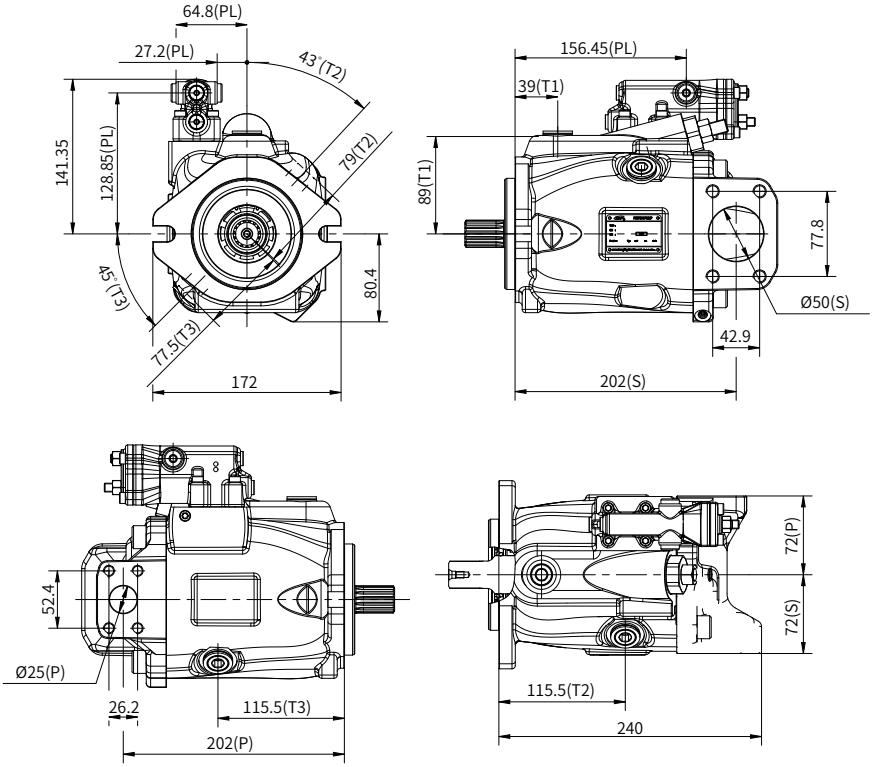

Port Details

	Port Name	油口尺寸和类型			拧紧力矩 (N-m)
P	Working port	1" SAE J518C Code 61 (5000psi)	M（公制）	M10×1.5(深 17mm)	57
S	Suction Port	2" SAE J518C Code 61 (3000psi)	M（公制）	M12×1.75 (深 20mm)	98
T1	Case drain Port	M22×1.5(ISO 6149-1)			60
PL	LS Control Port	M12×1.5(ISO 6149-1)			35
T2、T3	Air bleed port	M22×1.5(ISO 6149-1)			60

Installation size

HP5VS85 Mounting Flange

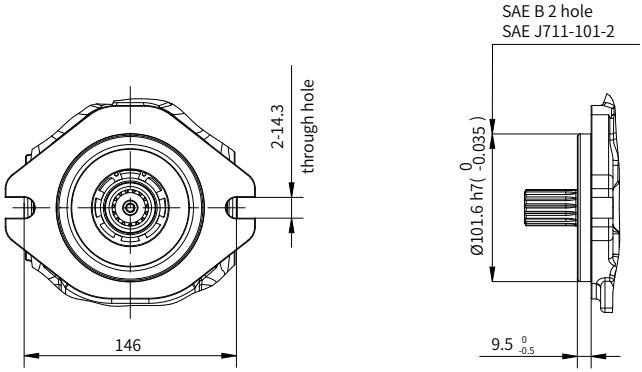

SAE "C2" type

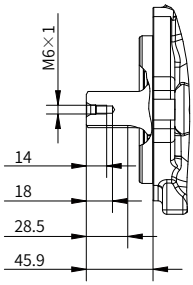

"S2" type spline shaft

Installation size

HP5V105 installation size

HP5V105 with Cut-off/Load Sense Control with torque limit (Clockwise Rotation)
For the CCW pump just reverse the inlet and outlet port.

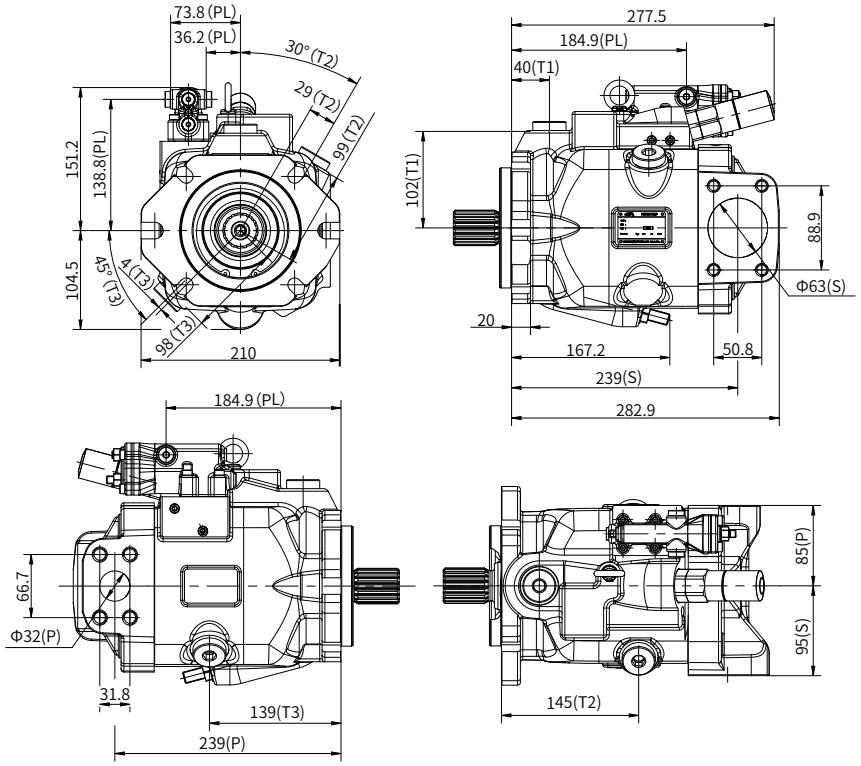

Port Details

	Port Name	Port Size and Description			Tightening Torque (N-m)
P	Working port	1 1/4"SAE J518C code 62 (5000psi)	M (metric)	M14×2 (depth 19mm)	157
			S(UNC)	1/2-13UNC-2B (depth 22mm)	
S	Suction Port	2 1/2"SAE J518C code 61 (2500psi)	M (metric)	M12×1.75 (depth 17mm)	98
			S(UNC)	1/2-13UNC-2B (depth 22mm)	
T1	Case drain port	SAE J1926/1 (1 1/16-12UN-2B depth 15mm)			167
PL	LS Control port	SAE J1926/1 (7/16-20UNF-2B depth 15mm)			12
T2、T3	Ail Bleed port	SAE J1926/1 (1 1/16-12UN-2B depth 15mm)			167

Installation size

HP5V105 Mounting Flange

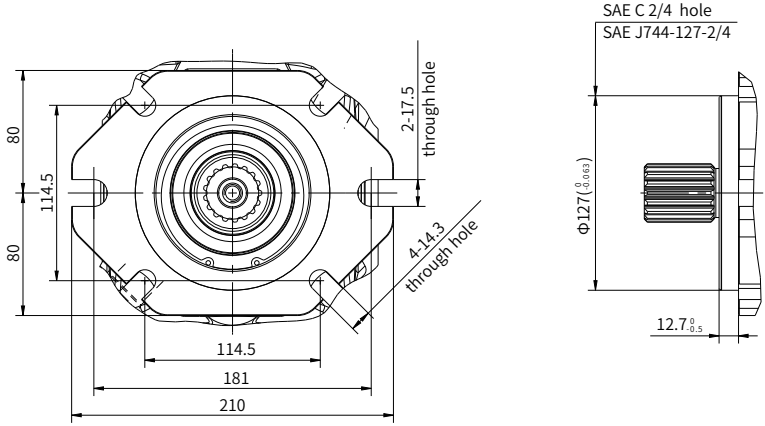

HP5V105 Input Shaft type

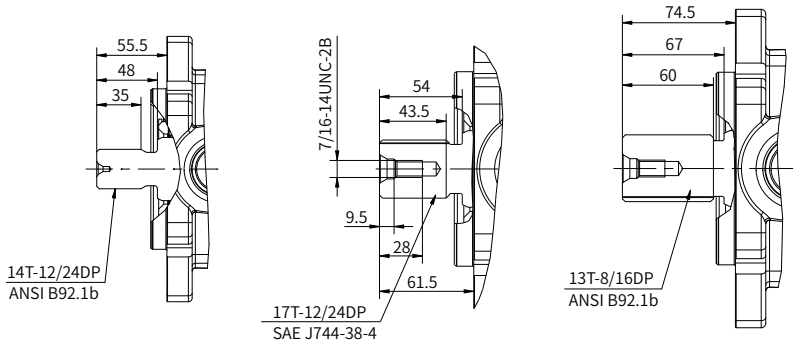

"S3" type spline shaft "S4" type spline shaft "S5" type spline shaft

Through Drive Installation Options

A1 Type

SAE A 82-2 + SAE J744-16-4 9T 16/32DP

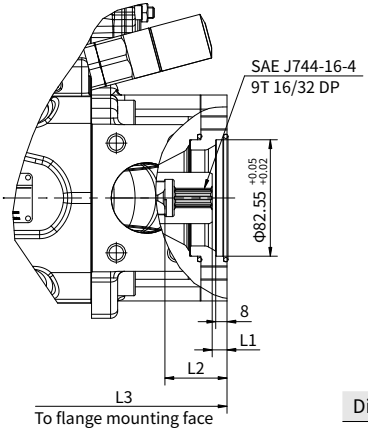

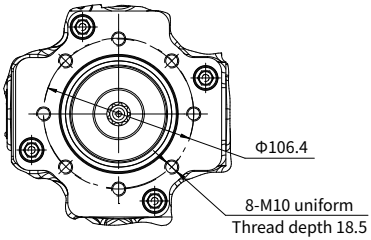

Disp.（cc/rev）	28	45/60	76/85	105
L1	8	12	10.5	14.5
L2	34	37.5	44	44.5
L3	204	226	265	307

A2 Type

SAE A 82-2 + SAE J744-19-4 11T 16/32DP

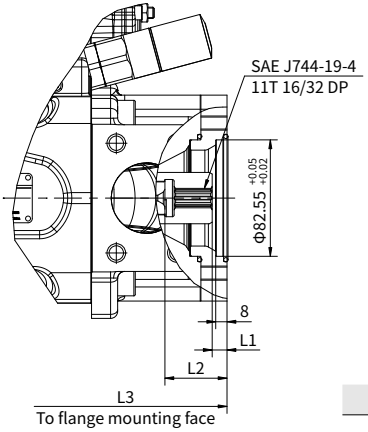

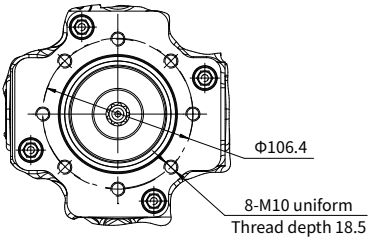

Disp.（cc/rev）	76/85	105
L1	10.5	14.5
L2	44	44.5
L3	265	307

Through Drive Installation Options

B1 Type

SAE B 101 -2 + SAE J744-22-4 13T 16/32DP

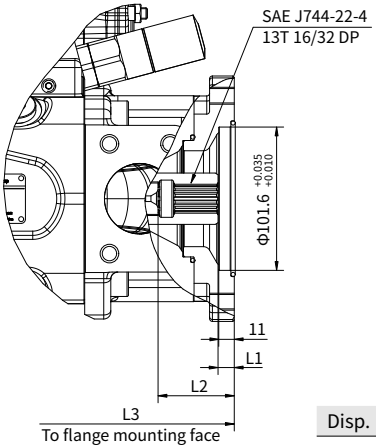

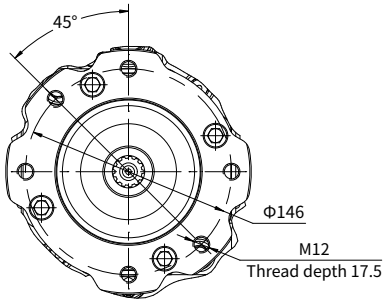

Disp. (cc/rev)	28	45/60	76/85	105
L1	11	11.2	11.5	11.5
L2	50.5	52.4	54	51
L3	224	250.5	275	314

B2 Type

SAE B 101 -2 + SAE J744-25-4 15T 16/32DP

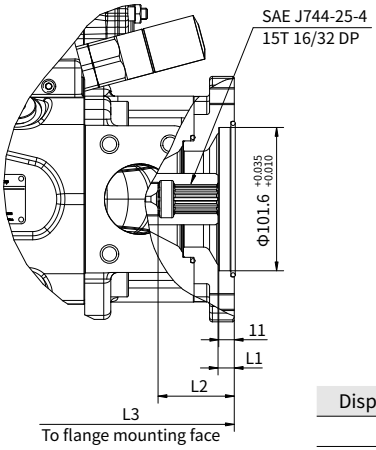

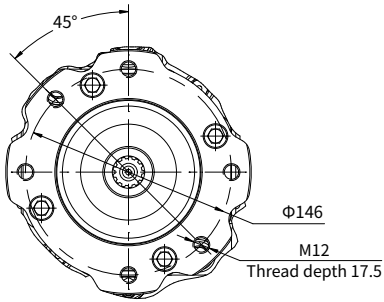

Disp. (cc/rev)	45/60	76/85	105
L1	11.2	11.5	11.5
L2	52.4	54	51
L3	250.5	275	314

01

Through Drive Installation Options

C1 Type

SAE C 127-2 + SAE J744-32-4 14T 12/24DP

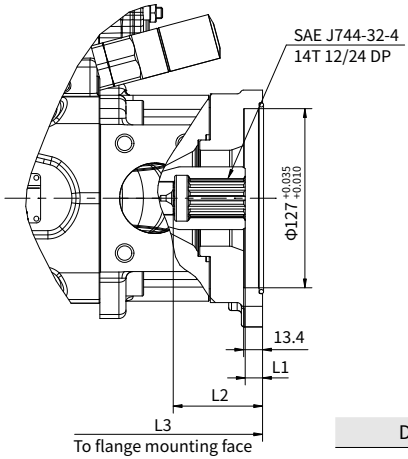

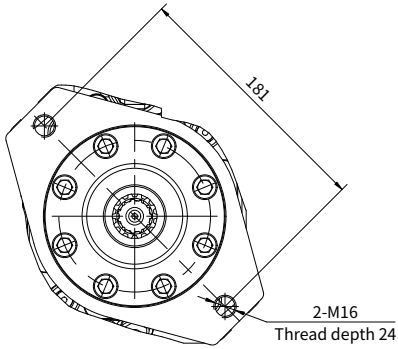

Disp. (cc/rev)	76/85
L1	11.5
L2	62.5
L3	283.5

C2 Type

SAE C 127-2 + SAE J744-38-4 17T 12/24DP

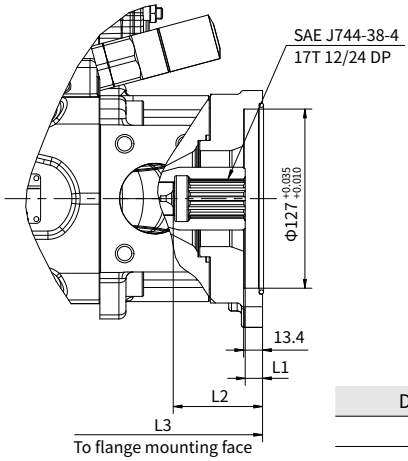

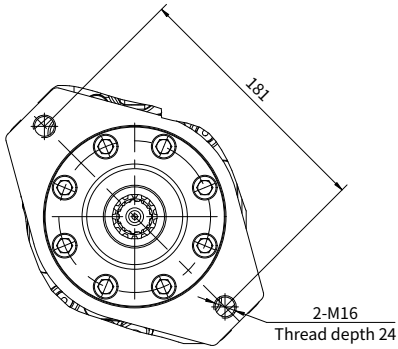

Disp. (cc/rev)	105
L1	13
L2	64.5
L3	326.5

Through Drive Installation Options

C3 Type

SAE C 127-4 + SAE J744-32-4 14T 12/24DP

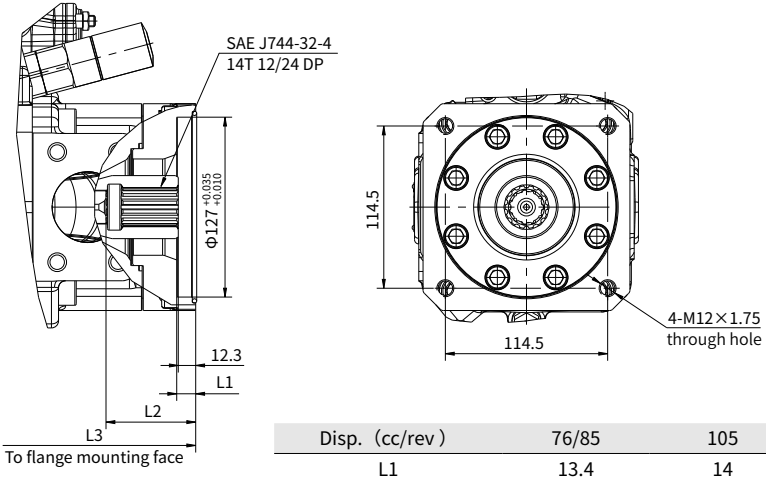

Disp.（cc/rev）	76/85	105
L1	13.4	14
L2	63.3	59
L3	284.3	321.5

C4 Type

SAE C 127-4 + SAE J744-38-4 17T 12/24DP

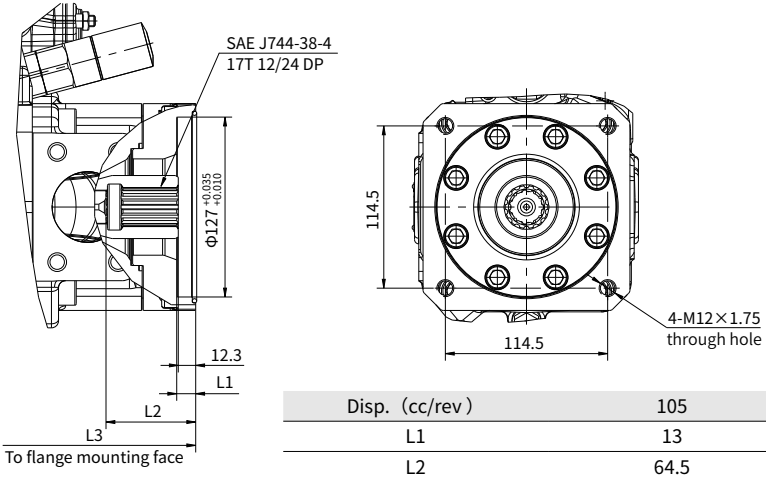

Disp.（cc/rev）	105
L1	13
L2	64.5
L3	326.5

China
+86 400 101 8889

America
+01 630 995 3674

Germany
+49（30）72088-0

Japan
+81 03 6809 1696