1.11

30SD08-40 TYPE

Solenoid Directional Valve

Rated pressure (bar / psi)	207 / 3000
Peak flow (L/min / gpm)	See performance chart

Features

- Continuous-duty rated coil
- Efficient wet-armature construction
- Cartridges are voltage interchangeable
- Optional waterproof E-Coils rated up to IP69K
- Hardened parts for long life

Contents

Description	02
Operation	02
Ordering code	02
Materials	02
Technical data	03
Performance	03
Dimensions	04

Symbol

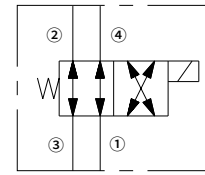

Description

A solenoid-operated, 4-way, 2-position, direct-acting spool-type, screw-in hydraulic cartridge valve.

Operation

When de-energized, the 30SD08-40 flow paths are ③ to ② and ④ to ① .
When energized, the valve's spool shifts to open ③ to ④ and ② to ① .
All ports are open at cross-over.

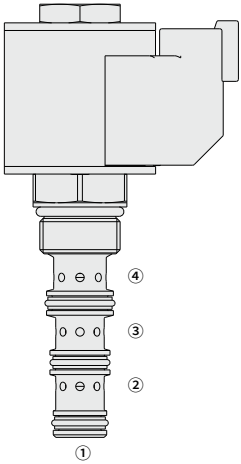

Ordering Code

30SD08-40 ☐ - ☐ - ☐ - ☐ ☐ ☐ ☐

Option:

None	Blank

Cartridge only 0

Seals:

Polyurethane (Std.)	P
Buna N	N
Fluorocarbon	V

E-Coil:

Less Coil	00
10VDC	10
12VDC	12
20VDC	20
24VDC	24

Termination (VDC)

E-Coil:

Deutsch DT04-2P (IP69K Rated)	ER
Lead wires (2) (IP69K Rated)	EL

Materials

Cartridge:
Weight: 0.13 kg; Steel with hardened work surfaces. Zinc-plated exposed surfaces; Polyurethane (Std.) seal.

Standard Ported Body:
Anodized high-strength aluminum alloy, rated to 240 bar; Ductile iron and steel bodies available; Dimensions may differ, consult factory.

Standard Coil: Consult factory.

E-Coil:
Weight:0.14 kg; Perfect wound, fully encapsulated with rugged external metal shell; Rated up to IP69K with Deutsch sockets.

Technical Data

Rated pressure	207 bar (3000 psi)
Peak flow	See performance chart
Internal leakage	⩽ 82 mL/min@207 bar
Coil duty rating	Continuous from 85% to 115% of nominal voltage
Initial coil current draw at 20°C	1.4 A at 12VDC; 0.7 A at 24VDC
Minimum pull-in voltage	85% of nominal at 207 bar
Cavity	VC08-4
Fluid	Mineral-based or synthetics with lubricating properties
Viscosity range	7.4 to 420 mm^2/s
Temperature range	-54 to 107 °C (Polyurethane seals)
	-40 to 100 °C (Buna N seals)
	-26 to 204 °C (Fluorocarbon seals)
Degree of fluid contamination	The minimum pollution level is ISO4406 level 20/18/14, and level 17/15/13 is recommended to prolong the service life

Performance (Cartridge Only)

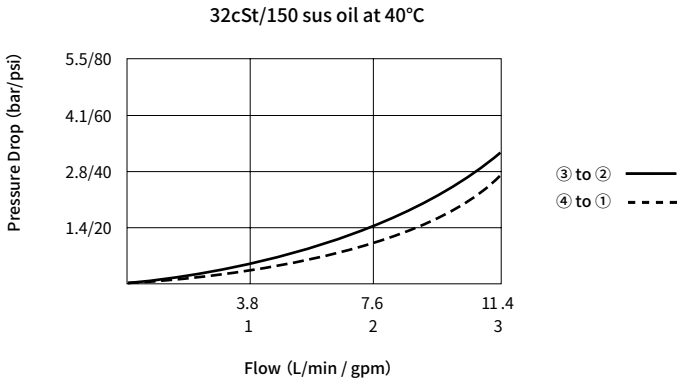

Dimensions
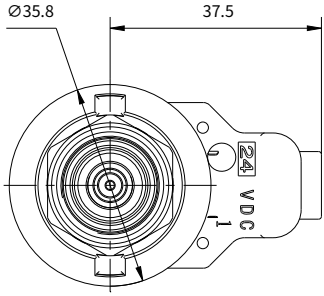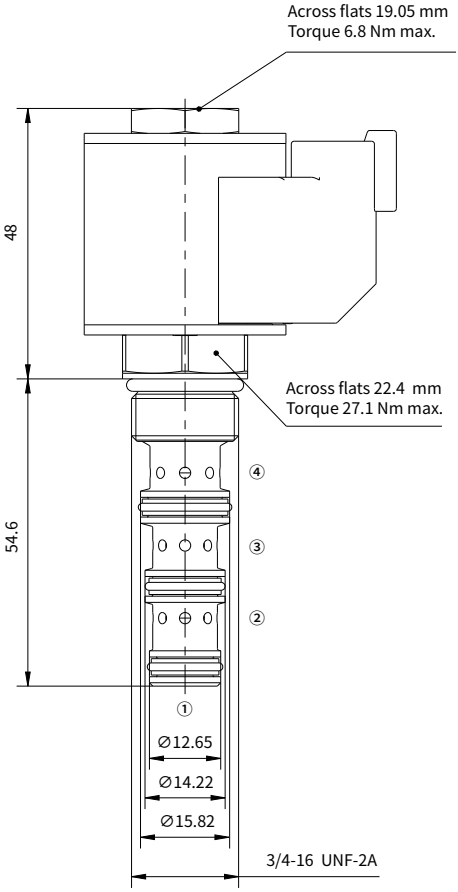
(Dimensions in mm)