1.4

30SD08-21 TYPE

Solenoid Directional Valve

Rated pressure (bar / psi)	207 / 3000
Peak flow (L/min / gpm)	30 / 8 (See performance chart)

Features

- Continuous-duty rated coil
- Efficient wet-armature construction
- Cartridges are voltage interchangeable
- Optional waterproof E-Coils rated up to IP69K
- Industry common cavity
- Hardened parts for long life and low leakage

Contents

Description	02
Operation	02
Ordering code	02
Materials	02
Technical data	03
Performance	03
Dimensions	04

Symbol

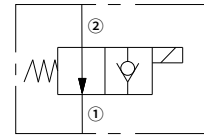

Description

A solenoid-operated, 2-way, piloted, poppet-type, normally open, screw-in, hydraulic cartridge valve designed for low leakage in load-holding applications.

Operation

When de-energized, the valve allows flow from ② to ① .
Flow from ① to ② is severely restricted in this mode.
When energized, the valve’ s poppet closes on its seat, blocking flow from ② to ① .
In this mode the cartridge will allow ① to ② flow after overcoming the solenoid force (requires 3.4 to 10.3 bar[50 to 150 psi]).

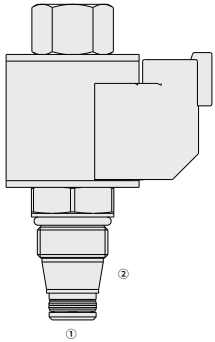

Ordering Code

30SD08-21 □ - □ - □ - □ □ □ □

Option:
None Blank
150μ Screen S

Cartridge Only 0

Seals:
Buna N (Std.) N
Polyurethane P
Fluorocarbon V

E-Coil:
Less Coil 00
10VDC 10
12VDC 12
20VDC 20
24VDC 24

Termination (VDC)
E-Coil:
Deutsch DT04-2P (IP69K Rated)) ER
Lead wires (2) (IP69K Rated) EL

Materials

Cartridge:
Weight: 0.12 kg; Steel with hardened work surfaces. Zinc-plated exposed surfaces;
Buna N (Std.) seal.

Standard Ported Body:
Anodized high-strength aluminum alloy, rated to 240 bar; Ductile iron and steel bodies available;
Dimensions may differ, consult factory.

Standard Coil: Consult factory.

E-Coil:
Weight: 0.14 kg; Perfect wound, fully encapsulated with rugged external metal shell; Rated up to IP69K with Deutsch sockets.

Technical Data

Rated pressure	207 bar (3000 psi)
Peak flow	See performance chart
Internal leakage	⩽ 0.15 mL/min (3 drops/min) @207 bar
Coil duty rating	Continuous from 85% to 115% of nominal voltage
Initial coil current draw at 20°C	1.4 A at 12VDC; 0.7 A at 24VDC
Minimum pull-in voltage	85% of nominal at 207 bar
Cavity	VC08-2
Fluid	Mineral-based or synthetics with lubricating properties
Viscosity range	7.4 to 420 mm^2/s
Temperature range	-40 to 100 °C (Buna N seals)
	-54 to 107 °C (Polyurethane seals)
	-26 to 204 °C (Fluorocarbon seals)
Degree of fluid contamination	The minimum pollution level is ISO4406 level 20/18/14, and level 17/15/13 is recommended to prolong the service life

Performance (Cartridge Only)

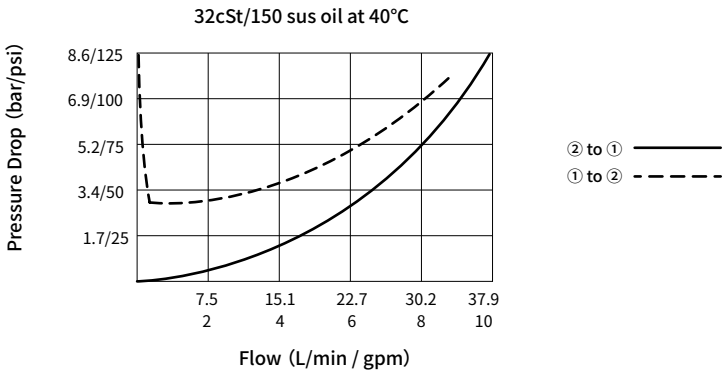

Dimensions
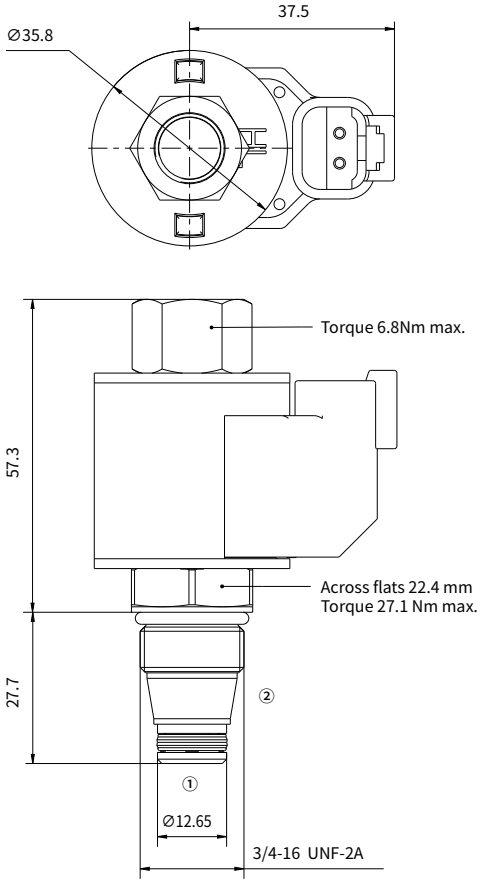
(Dimensions in mm)